Autoregressive Latent Trajectory (ALT) Models
A Synthesis of Two Traditions

KENNETH A. BOLLEN
PATRICK J. CURRAN
University of North Carolina at Chapel Hill

Although there are a variety of statistical methods available for the analysis of longitudinal panel data, two approaches are of particular historical importance: the autoregressive (simplex) model and the latent trajectory (curve) model. These two approaches have been portrayed as competing methodologies such that one approach is superior to the other. We argue that the autoregressive and trajectory models are special cases of a more encompassing model that we call the autoregressive latent trajectory (ALT) model. In this paper we detail the underlying statistical theory and mathematical identification of this model, and demonstrate the ALT model using two empirical data sets. The first reanalyzes a simulated repeated measures data set that was previously used to argue against the autoregressive model, and we illustrate how the ALT model can recover the true latent curve model. Second, we apply the ALT model to real family income data on N=3912 adults over a seven year period and find evidence for both autoregressive and latent trajectory processes. Extensions and limitations are discussed.

Keywords: *latent curve analysis; autoregressive models; structural equation models; repeated measures analysis; growth curve modeling*

INTRODUCTION

The availability of longitudinal data has stimulated the development of statistical methodologies that are well-suited for such data. Though the variety of methods to analyze panel data is impressive, two broad traditions have received considerable attention in the social sciences. We refer to the *autoregressive model* and *latent trajectory model* (or

AUTHORS' NOTE: *We would like to thank Dan Bauer and the CSEM group for their comments. Earlier versions of this paper were presented at the May, 1999, Psychometric Society Meetings in Lawrence, Kansas, and at the April, 2000, symposium in honor of Karl Jöreskog's retirement in Uppsala, Sweden. The work was partially funded by NIDA grant DA13148 awarded to the authors*

SOCIOLOGICAL METHODS & RESEARCH, Vol. 32, No. 3, February 2004 336-383
DOI: 10.1177/0049124103260222

latent growth curve models). A distinguishing characteristic of the autoregressive models is that they allow the prior value to determine the current value of the same variable.[1] The variables might be latent or observed, or there could be series of variables with cross-lagged effects, but the key feature of the autoregressive model is the regression of a variable on its earlier value. In contrast, the latent trajectory ("growth curve") model allows separate trajectories over time for repeated measures. Each case in the sample can have a different time trend as marked by a different intercept or slope when tracked over time. Researchers capture some curvilinear patterns by allowing quadratics in time or nonlinear time trends.

The autoregressive and the latent trajectory models each have deep roots in social science methodology. For instance, Kessler and Greenberg (1981) devote a book to variants of the autoregressive model demonstrating its applicability to numerous substantive areas as diverse as the democratization of countries to IQ and scholastic achievement. Similarly, the latent curve or trajectory models have applications in studies of alcohol use (Curran 2000; Duncan and Duncan 1994), intelligence tests (McArdle and Epstein 1987; Raykov 1997), and academic achievement (Muthén and Khoo 1998), just to name a few. The parallel development has been largely independent until recently when some researchers have cast these approaches as competing ways to analyze longitudinal data (see, e.g., Bast and Reitsma 1997; Curran 2000; Kenny and Campbell 1989; Marsh 1993; Rogosa and Willett 1985). Readers are given the impression that the techniques are distinctly different longitudinal methods, and in some cases, writers express their belief in the inherent superiority of one over the other. For instance, Rogosa, Brandt, and Zimowski (1982, p. 744) recommend latent trajectory (growth curve) models and suggest that "The collection of individual X on t regression functions is the key initial summary of the data. The X_2 on X_1 regression is not a good source of information on individual change."

There are thus well developed tools to implement autoregressive or latent trajectory models. However there are many instances across the social sciences when both processes are plausible and may even be predicted by theory. For example, Hussong, Levy, Hicks, and Curran (2001) studied the relation between variations in daily alcohol use and daily mood fluctuations over a 30-day period. Here, the standard

AR model does not allow for the hypothesized individual specific random components underlying each of these processes. However, the standard latent trajectory model does not incorporate the hypothesized time-specific lagged effects between alcohol use and mood across each day of measure. Thus, neither modeling strategy allows for a comprehensive test of the hypothesized model. In many areas of the social and behavioral sciences plausible cases can be built to treat a process as either autoregressive or as a latent curve with individual specific parameters. Until now we could not determine which process best fits data or whether both autoregressive and latent curve processes are simultaneously operating. We propose a new model to explore these possibilities.

Our article is centered around two related goals. First, we construct a synthesized Autoregressive Latent Trajectory Model (ALT) that captures key features of both the autoregressive and the latent curve models. By incorporating autoregressive, cross-lagged, and latent curve models, the ALT model leads to a flexible, hybrid model. Second, we propose a general matrix expression that allows for the parameterization of a broad class of longitudinal models including the ALT model proposed here. Indeed, several classic analytic methods can be expressed by imposing certain restrictions on the broader matrix expression. Not only does this general expression explicate the natural linkages among a set of seemingly discrepant models, but this also allows for a natural method for establishing identification and estimation for a general class of models.

It is important to note that the model that we propose here is distinct from efforts that combine autoregressive *disturbances* with latent trajectory models (e.g., Chi and Reinsel 1989; Browne and du Toit 1991; Diggle, Liang and Zeger 1994; Goldstein, Healy and Rasbash 1994). It also differs from the latent difference score (e.g., McArdle and Hamagami 2001), trait-state models (e.g., Kenny and Zautra 2001), and the SEM for longitudinal data in Jöreskog (1977; 1978). We explore this issue in greater detail later in the paper. The proposed ALT model permits empirical examination of a new hybrid model that allows lsikelihood ratio tests to distinguish between alternative model parameterizations. Though we will illustrate the ALT model with two empirical examples, our primary goal is to provide the technical development of the model.[2]

We begin with a review of the univariate and bivariate autoregressive (AR) simplex models. This is followed by a description of the univariate and bivariate latent trajectory (LT) model. Next, we present the Autoregressive Latent Trajectory (ALT) model for both the univariate and bivariate situation. We then present a single general matrix expression that conveniently represents the AR, LT and ALT model structures. A section on identifying conditions for the ALT model is followed by a discussion of estimation and model testing. Two brief empirical examples are used to illustrate the ALT model. We also briefly mention extensions of the ALT model and make comparisons of it to other recent longitudinal models in a section that precedes the conclusions. Finally, we conclude by describing ways to apply the ALT model and by highlighting its advantages and potential limitations.

AUTOREGRESSIVE (SIMPLEX) MODELS
UNIVARIATE SERIES PANEL DATA

Anderson (1960), Humphreys (1960), Heise (1969), Wiley and Wiley (1970), Jöreskog (1970; 1979), and Werts, Jöreskog, and Linn (1971) developed conditions of identification and estimation of autoregressive models where a variable is an additive function of its immediately preceding value plus a random disturbance. In some cases the autoregressive models included latent variables and measurement error in the observed variables. Here we ignore measurement error and build autoregressive structures in the observed variables. Autoregressive refers to models where a variable is regressed on itself at an earlier time period.

The equation for the simplest autoregressive model is

$$y_{it} = \alpha_t + \rho_{t,t-1} y_{i,t-1} + \varepsilon_{it}, \tag{1}$$

where $E(\varepsilon_{it}) = 0$ for all i and t, $COV(\varepsilon_{it}, y_{i,t-1}) = 0$ for all i and $t = 2, 3, \ldots T$, $E(\varepsilon_{it}, \varepsilon_{jt}) = 0$ for all t and $i \neq j$, and $E(\varepsilon_{it}, \varepsilon_{jt}) = \sigma^2_{\varepsilon_t}$ for all t and $i = j$ and $E(\varepsilon_{it}, \varepsilon_{j,t+k}) = 0$ for all k and $i \neq j$. Figure 1a is the path diagram for this equation where there are four waves of data. Though it is possible to permit autoregressive disturbances, to keep the model simple we follow the predominant practice and assume

nonautocorrelated disturbances ($E(\varepsilon_{it}, \varepsilon_{i,t+k}) = 0$ for $k \neq 0$). The α_t is the intercept for the equation for time t. The constant $\rho_{t,t-1}$ is the autoregressive parameter. It gives the impact of the prior value of y on the current one. Throughout the paper i indexes the cases while t indexes the time period. For this and some of the other models, we treat y_{it} as predetermined for $t = 1$.

We can write the vector of means ($\boldsymbol{\mu}$) and the covariance matrix ($\boldsymbol{\Sigma}$) of the observed variables as a function of the model parameters α_t, $\rho_{t,t-1}$, $VAR(y_1)$, and $\sigma^2_{\varepsilon_t}$. We postpone presenting this until a later section where we show a general equation that incorporates the autoregressive model and the other models that we present in this paper.[3] One variant of the model allows not just the immediately prior value of y_{it} to influence the current value (or an AR(1) process), but permits earlier lagged values to affect y_{it} (AR(p) patterns). Another allows autoregressive patterns in the error terms. However, we stay with the preceding, more standard model, recognizing that the results could be extended to these additional lags.

BIVARIATE SERIES PANEL DATA

Panel data models that include additional explanatory variables received considerable attention and development from several sources (e.g., Campbell 1963; Bohrnstedt 1969; Duncan 1969; Heise 1969; Jöreskog 1979). We extend Equation 1 to include both the autoregressive parameters as well as the crosslagged coefficients that allow for influences across distinct variables. These crosslags represent the longitudinal prediction of one variable from the other above and beyond the autoregressive prediction of that variable from itself. The equations for this model are

$$y_{it} = \alpha_{yt} + \rho_{y_t y_{t-1}} y_{i,t-1} + \rho_{y_t x_{t-1}} x_{i,t-1} + \varepsilon_{yit} \tag{2}$$

$$x_{it} = \alpha_{xt} + \rho_{x_t y_{t-1}} y_{i,t-1} + \rho_{x_t x_{t-1}} x_{i,t-1} + \varepsilon_{xit} \tag{3}$$

where $E(\varepsilon_{yit}) = E(\varepsilon_{xit}) = 0$ for all i and t, $COV(\varepsilon_{yit}, y_{i,t-1}) = COV(\varepsilon_{xit}, y_{i,t-1}) = 0$ and $COV(\varepsilon_{yit}, x_{i,t-1}) = COV(\varepsilon_{xit}, x_{i,t-1}) = 0$ for all i and $t = 2, 3, \ldots T$. Furthermore we assume that $E(\varepsilon_{yit}, \varepsilon_{yjt+k}) = E(\varepsilon_{xit}, \varepsilon_{xjt+k}) = 0$ for all t, k and $i \neq j$, and $E(\varepsilon_{yit}, \varepsilon_{yit}) = \sigma^2_{\varepsilon_{yt}}$ and $E(\varepsilon_{xit}, \varepsilon_{xit}) = \sigma^2_{\varepsilon_{xt}}$ for all i, t. As with

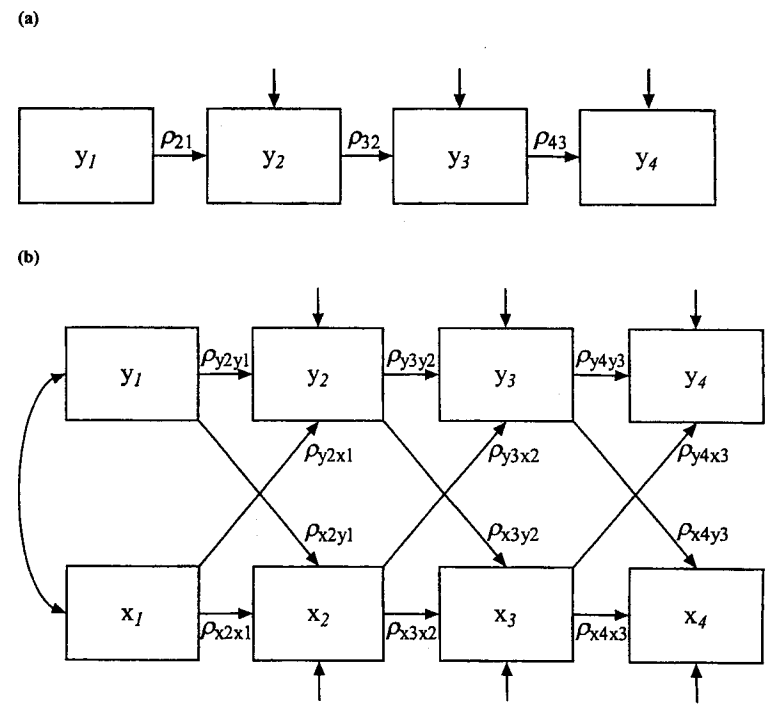

Figure 1: a. Autoregressive Model for Repeated Measure. b. Autoregressive and Cross-Lagged Model for Two Repeated Measures

the univariate series we keep the model simple by assuming that $E(\varepsilon_{yit}, \varepsilon_{yit+k}) = E(\varepsilon_{xit}, \varepsilon_{xit+k}) = 0$ for all i and t with $k \neq 0$ though researchers can modify this assumption provided that the resulting model is identified. The α_{yt} and α_{xt} are the intercepts for the equations at time t. The constants $\rho_{y_t y_{t-1}}$ and $\rho_{x_t x_{t-1}}$ are autoregressive para-meters. The $\rho_{y_t x_{t-1}}$ and $\rho_{x_t y_{t-1}}$ are cross-lagged coefficients. Figure 1b is a path diagram of this model for four waves of data.

LATENT TRAJECTORY (CURVE) ANALYSIS

The Latent Trajectory (LT) model departs from the autoregressive model in several ways. The autoregressive univariate and bivariate models consider change over time in terms of each variable depending on its immediately prior value. In addition, the autoregressive and

cross-lagged effects are the same for each individual in the sample. In contrast, the LT models focus on the trajectory of change for each individual over the time period that the data cover. Instead of examining the time adjacent relations of a variable, we use the observed repeated measures to estimate a single underlying growth trajectory for each person across all timepoints.

Browne and du Toit (1991, p.61) credit Rao (1958), Tucker (1958), and Meredith (in Scher, Young, and Meredith 1960) as the independent creators of "latent curve analysis." Modeling of individual differences in development over time has a much longer history. For example, Robertson (1908) applied double and triple logistic curves to model growth in animals and humans, Reed and Pearl (1927) utilized sums of logistic curves to model population growth in the United States, and Wishart (1938) fit individual parabolas to weight gains in bacon pigs and modeled individual differences in these trajectories as a function of gender and protein in diet. Meredith and Tisak (1984; 1990) first illustrated how to estimate these growth models using a structural equation framework (see also McArdle 1986, 1991; McArdle and Epstein, 1987; Muthén, 1991). We will first present the latent trajectory model for a univariate series which we follow with extensions to two or more trajectories.

UNIVARIATE LATENT TRAJECTORY ANALYSIS

The model for the univariate Latent Trajectory (LT) model is

$$y_{it} = \alpha_i + \Lambda_{t2}\beta_i + \varepsilon_{it}, \tag{4}$$

where α_i is the random intercept for case i and β_i is the random slope for case i. The Λ_{t2} is a constant within time t where $\Lambda_{12} = 0$, $\Lambda_{22} = 1$. The remaining values of Λ_{t2} allow the incorporation of linear or nonlinear trajectories. There are a variety of ways in which to code time via Λ_{t2}, the full exploration of which is beyond the scope of the current manuscript. For the remainder of the article, we set $\Lambda_{t2} = 0$ for $t = 1$ so that $E(\alpha_i)$ represents the mean of the trajectory at the initial time point. In the case of a linear trajectory model $\Lambda_{t2} = t - 1$ for all t. We assume that $E(\varepsilon_{it}) = 0$ for all i and t, $COV(\varepsilon_{it}, \beta_i) = 0$ and $COV(\varepsilon_{it}, \alpha_i) = 0$ for all i and $t = 2, 3, \ldots T$, $E(\varepsilon_{it}, \varepsilon_{jt}) = 0$ for all t and $i \neq j$, and $E(\varepsilon_{it}, \varepsilon_{it}) = \sigma^2_{\varepsilon_t}$ for each t.

Also, we assume that $COV(\varepsilon_{it}, \varepsilon_{i,t+k}) = 0$ for $k \neq 0$ so that the errors are not correlated over time. See references in footnote 1 and the next to the last section of this article for a discussion of these models with autoregressive disturbances.

The latent trajectory model allows each case (i) to have a distinct intercept and slope to describe the trajectory of a variable over time (t). This is captured by indexing the intercepts (α_i) and slopes (β_i) by i to show that they can differ across individuals. The mean intercept and mean slope are of interest and are expressed as

$$\alpha_i = \mu_\alpha + \zeta_{\alpha i} \tag{5}$$

$$\beta_i = \mu_\beta + \zeta_{\beta i} \tag{6}$$

where μ_α and μ_β are the mean intercept and slope across all cases. The $\zeta_{\alpha i}$ and $\zeta_{\beta i}$ are disturbances with means of zero and uncorrelated with ε_{it}. They represent the random variability around the mean intercept and mean slope and we allow $\zeta_{\alpha i}$ and $\zeta_{\beta i}$ to correlate. The *linear* trajectory model is the most widely used one.[4] Figure 2a is a path diagram of the linear latent trajectory model for four waves of data. The random intercepts and random slopes are latent variables in the diagram. The linear trajectory is captured by the "factor loadings" for β. The intercept α has an implicit coefficient of one in equation (4) and this is made explicit in the path diagram.

Contrasting the autoregressive model to the latent trajectory one, we can see that the equations hypothesize quite different relations between the variables. The autoregressive model gives primacy to lagged influences and fixed effects whereas the latent trajectory model focuses on individual differences in trajectories over time. Later we will give a general expression for writing the means and covariance matrix of the observed variables as a function of the model parameters. This expression will prove essential to establishing the identification of the model, to estimation of its parameters, and to assessing its fit to the data.

BIVARIATE LATENT TRAJECTORIES ANALYSIS

We can easily extend the univariate latent trajectory model above to consider change in two or more variables over time (e.g., see MacCallum, Kim, Mallarkey, and Kielcolt-Glaser 1997; Curran

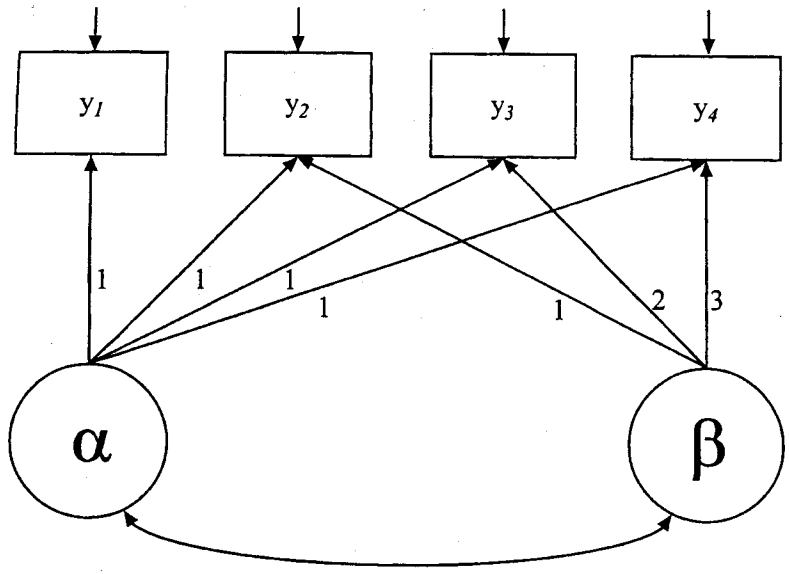

Figure 2a: Latent Trajectory Model for Single Repeated Measure

and Hussong 2002; Stoolmiller 1994). Conceptually, the bivariate trajectory model is simply the simultaneous estimation of two univariate latent trajectory models. Latent trajectory factors are estimated for each variable and the relation between the random intercepts and slopes is evaluated for each series. More formally, we can represent the bivariate latent trajectory analysis in two variables, say y_{it} and x_{it}, as

$$y_{it} = \alpha_{yi} + \Lambda_{yt2}\beta_{yi} + \varepsilon_{yit} \tag{7}$$

$$x_{it} = \alpha_{xi} + \Lambda_{xt2}\beta_{xi} + \varepsilon_{xit} \tag{8}$$

The assumptions for each latent trajectory equation match those for the univariate trajectory model. In addition, we generally assume that $COV(\varepsilon_{yit}, \varepsilon_{xit})$ is zero for all i and t and that the errors for each series are uncorrelated with the random intercepts and slopes for both series. The equations for the random intercepts and slopes for y_{it} are

$$\alpha_{yi} = \mu_{y\alpha} + \zeta_{y\alpha i} \tag{9}$$

$$\beta_{yi} = \mu_{y\beta} + \zeta_{y\beta i} \tag{10}$$

and for those from the x_{it} equation are

$$\alpha_{xi} = \mu_{x\alpha} + \zeta_{x\alpha i} \tag{11}$$

$$\beta_{xi} = \mu_{x\beta} + \zeta_{x\beta i} \tag{12}$$

where the disturbances have means of zero. The covariances of the random intercepts and random slopes for both series need not be and often are not zero.[5] Figure 2b is a path diagram of this model for four waves of data. The next sections discuss how to combine the autoregressive/cross-lagged model with the latent trajectory model and the complications in doing so.

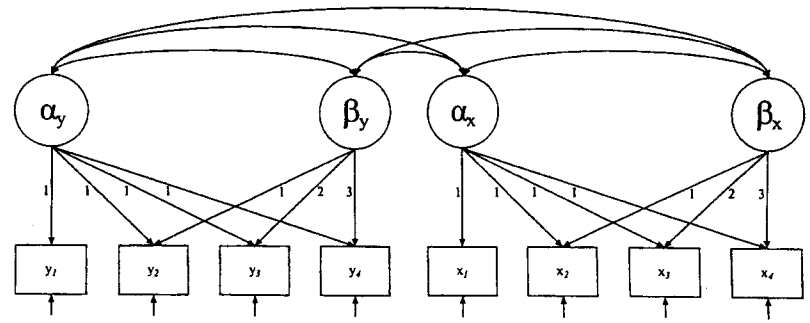

Figure 2b: Latent Trajectory Model for Two Repeated Measures

AUTOREGRESSIVE LATENT TRAJECTORY (ALT) MODEL

Up to this point we have reviewed the core elements of the univariate and bivariate autoregressive and latent trajectory models. Each of these methods has a distinct approach to modeling longitudinal data and each has been widely used in many empirical applications. Two key components of the autoregressive and cross-lagged models are the assumptions of lagged influences of a variable on itself and that the coefficients of effects are the same for all cases. In contrast, the latent trajectory model has no influences of the lagged values of a variable on itself and the intercept and slope parameters governing the trajectories differ over subjects in the analysis. Each of these assumptions

about the nature of change in variables is empirically or theoretically plausible. In fact it is possible that these types of change occur simultaneously. We will now combine features of both these models to result in a more comprehensive model for longitudinal data than either the autoregressive or latent trajectory model provides alone. We begin with the development of the single variable unconditional case, we extend this to include one or more covariates, and we conclude with the multivariate case both with and without covariates.

UNIVARIATE AUTOREGRESSIVE LATENT TRAJECTORY (ALT) MODEL: UNCONDITIONAL

We incorporate key elements from the latent trajectory and autoregressive models in the development of the univariate ALT model. From the latent trajectory model we include the random intercept and random slope factors to capture the fixed and random effects of the underlying trajectories over time. From the autoregressive model we include the standard fixed autoregressive parameters to capture the time specific influences between the repeated measures themselves. Importantly, whereas the means and intercepts are explicitly part of the repeated measures in the autoregressive model, the mean structure enters solely through the latent trajectory factors in the synthesized model.

The ALT equation for the set of repeated measures on construct y is

$$y_{it} = \alpha_i + \Lambda_{t2}\beta_i + \rho_{t,t-1}y_{i,t-1} + \varepsilon_{it}, \tag{13}$$

where $t = 2, 3, \ldots, T$, $E(\varepsilon_{it}) = 0$, $COV(\varepsilon_{it}, y_{i,t-1}) = 0$, $COV(\varepsilon_{it}, \beta_i) = 0$, and $COV(\varepsilon_{it}, \alpha_i) = 0$. We also assume $E(\varepsilon_{it}, \varepsilon_{jt}) = 0$ for all t and $i \neq j$ and $E(\varepsilon_{it}, \varepsilon_{it}) = \sigma^2_{\varepsilon_t}$ for each t. In keeping with the autoregressive and latent trajectory models we also assume nonautocorrelated disturbances (i.e., $COV(\varepsilon_{it}, \varepsilon_{i,t+k}) = 0$ for $k \neq 0$) though in some cases this restriction could be removed. As this equation makes clear, the ALT model permits lagged values of y to influence current values at the same time that the trajectory of y is in part governed by the random intercepts and slopes.[6] The key features of the autoregressive and latent trajectory models are present in the single equation. As with the standard latent trajectory model

described above, the random intercept and slope components can be expressed as

$$\alpha_i = \mu_\alpha + \zeta_{\alpha i} \tag{14}$$

$$\beta_i = \mu_\beta + \zeta_{\beta i} \tag{15}$$

where now the fixed and random trajectory components are net the lagged time-specific effects. We consider this an unconditional ALT model because there are no exogenous predictors beyond the lagged repeated measures included in either Equations 13, 14 or 15.

Usually we will treat y_{i1} as predetermined in the ALT model and y_{i1} can be expressed simply by an unconditional mean and an individual deviation from the mean. Specifically,

$$y_{i1} = \nu_1 + \varepsilon_{i1}. \tag{16}$$

The predetermined y_{i1} correlates with α_i and β_i. Figure 3a is the ALT model for four waves of data where the y_{i1} variable is predetermined. However, there are some instances where treating the initial measure as endogenous will be required to achieve identification. In those cases where y_{i1} is endogenous, the ALT equation for the first time period is

$$y_{i1} = \Lambda_{11}\alpha_i + \Lambda_{12}\beta_i + \varepsilon_{i1} \tag{17}$$

and all other equations remain the same. We explore this endogenous initial measure model in greater detail later. But suffice it to say that we cannot casually take the latent trajectory model from Figure 2a and include autoregressive paths between the ys to get the ALT model. Complications emerge for the first wave of data. A simple way to avoid the complications is to treat y_{i1} as predetermined. When this is not done, then we must estimate the factor loadings for y_{i1}.s We return to this point later.

We can demonstrate that the autoregressive and the latent trajectory models are directly related to the ALT model. This is most straightforward to see for the latent trajectory model. Suppose that we have the ALT model in the form where y_{i1} is endogenous (i.e., Equation 17). If the autoregressive parameter, $\rho_{t,t-1}$ is zero for all time periods, then we obtain the identical model to that for the latent trajectory model where $\Lambda_{11} = 1$ and $\Lambda_{12} = 0$. Thus we see that the latent trajectory

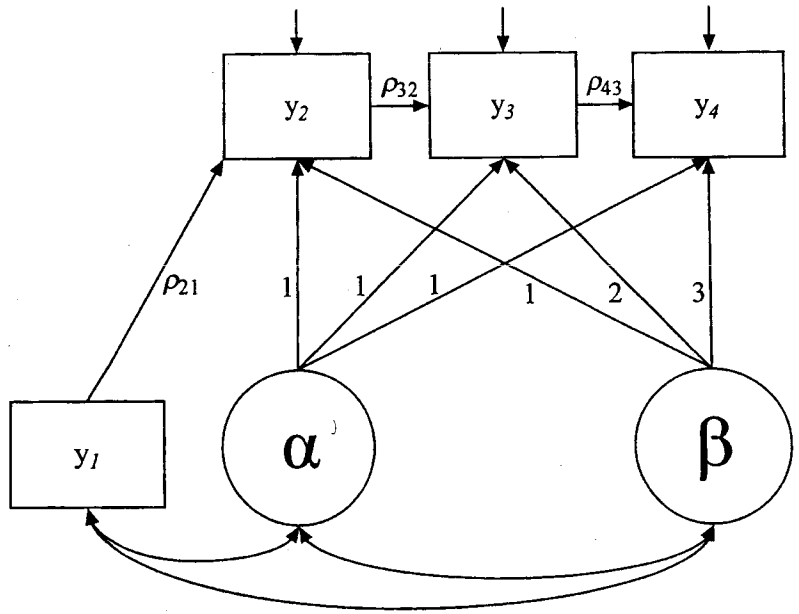

Figure 3a: Autoregressive Latent Trajectory (ALT) Model for Single Repeated Measure

model is nested within this form of the ALT model. As such we can apply likelihood ratio tests to compare the overall fit of these two models. If we use the form of the ALT model where y_{i1} is predetermined, then strictly speaking the latent trajectory and the ALT model are not nested since the latent trajectory model treats y_{i1} as endogenous and the parameters of the latter model are not a subset of those of the ALT model. However, we can indirectly test the ALT model with y_{i1} predetermined, if we consider a special form of the latent trajectory model where y_{i1} is predetermined. Then we can compare the ALT model to the latent trajectory model by estimating the $\rho_{t,t-1}$'s in one model and constraining them to zero in the second to get the modi-fied latent trajectory model. We will illustrate this test with our first simulation example. If we find the $\rho_{t,t-1}$'s are zero, the more typical form of the latent trajectory model with an endogenous y_{i1} could be used.

By different settings we can recover the autoregressive model (i.e., equation 1) from the ALT model (i.e., Equation 13) with

y_{i1} predetermined. If α_i is a constant zero for all cases, μ_β is 1, $VAR(\beta_i) = 0$, and Λ_{t2} is a free parameter for all time periods, the result is equivalent to equation (1). Here the Λ_{t2} plays the role of the intercept term of the autoregressive model. Though this does reveal the relationship between the ALT and autoregressive model, it fails to show a nested relationship.

The unconditional ALT model thus allows for the simultaneous estimation of both autoregressive and random trajectory components in modeling the repeated measures of a single construct over time. We now expand the unconditional univariate ALT model to include one or more explanatory variables.

UNIVARIATE AUTOREGRESSIVE LATENT TRAJECTORY (ALT) MODEL: CONDITIONAL

The above model is considered unconditional in that we are not incorporating any effects from exogenous predictors outside of the set of repeated measures. However, we can extend this model to allow for such conditional effects. Here we will consider the incorporation of two time invariant exogenous predictors, z_{i1} and z_{i2} though it is easy to generalize this model to any number of covariates. Further, we consider these to be time invariant given that these are assessed at one point in time and are not functionally related to the passage of time.

To incorporate the influences of these exogenous measures, we will first expand the equations for the random intercept and slope such that

$$\alpha_i = \mu_\alpha + \gamma_{\alpha 1} z_{i1} + \gamma_{\alpha 2} z_{i2} + \zeta_{\alpha i} \tag{18}$$

$$\beta_i = \mu_\beta + \gamma_{\beta 1} z_{i1} + \gamma_{\beta 2} z_{i2} + \zeta_{\beta i} \tag{19}$$

where the four gamma parameters (i.e., $\gamma_{\alpha 1}, \gamma_{\alpha 2}, \gamma_{\beta 1}, \gamma_{\beta 2}$) represent the fixed regressions of the random intercept and slope components on the two correlated exogenous predictors. It is important to note that these regression parameters are fixed and represent the shift in the conditional means of the random trajectory parameters as a function of the explanatory variables.

If the ALT model treats the initial repeated measure as endogenous in the system, only the equations for the random trajectories reflect the inclusion of the covariates (i.e., as shown in Equations 18 and 19). However, if the initial measure in the series is treated as predetermined, then this must also be regressed on the set of covariates. Thus, Equation 16 is modified such that

$$y_{i1} = \nu_1 + \gamma_{y1} z_{i1} + \gamma_{y2} z_{i2} + \varepsilon_{i1} \tag{20}$$

where ν_1 now represents a regression intercept and ε_{i1} represents an individual-specific residual. The γ again represent the fixed regressions of the predetermined y_{i1} on the two covariates. Figure 3b is a path diagram of the conditional ALT model for four waves of data and with two covariates.

We invoke standard assumptions in the estimation of the conditional ALT model. Namely, we assume the residuals (i.e., $\zeta_{\alpha i}$, $\zeta_{\beta i}$, ε_{i1}) have zero means and are uncorrelated with the exogenous variables. Further, the residuals may be correlated across equations but not within equation and that they are not autocorrelated. Finally, we assume the exogenous variables are error free.

BIVARIATE AUTOREGRESSIVE LATENT TRAJECTORY (ALT) MODEL: UNCONDITIONAL

In the conditional univariate ALT model, we considered the influences of one or more time invariant covariates. However, there are many instances in which there might be interest in the relationship between two constructs, each of which is functionally related to the passage of time. We can extend the univariate ALT model to include two or more variables measured repeatedly over time. This bivariate ALT model for random variables y_{it} and x_{it} is given as

$$y_{it} = \alpha_{yi} + \Lambda_{yt2}\beta_{yi} + \rho_{y_t y_{t-1}} y_{i,t-1} + \rho_{y_t x_{t-1}} x_{i,t-1} + \varepsilon_{yit} \tag{21}$$

$$x_{it} = \alpha_{xi} + \Lambda_{xt2}\beta_{xi} + \rho_{x_t y_{t-1}} y_{i,t-1} + \rho_{x_t x_{t-1}} x_{i,t-1} + \varepsilon_{xit} \tag{22}$$

As before we assume that the error terms (ε's) have means of zero, are not autocorrelated, and are uncorrelated with the right-hand side variables and random coefficients, though ε_{yit} might correlate with

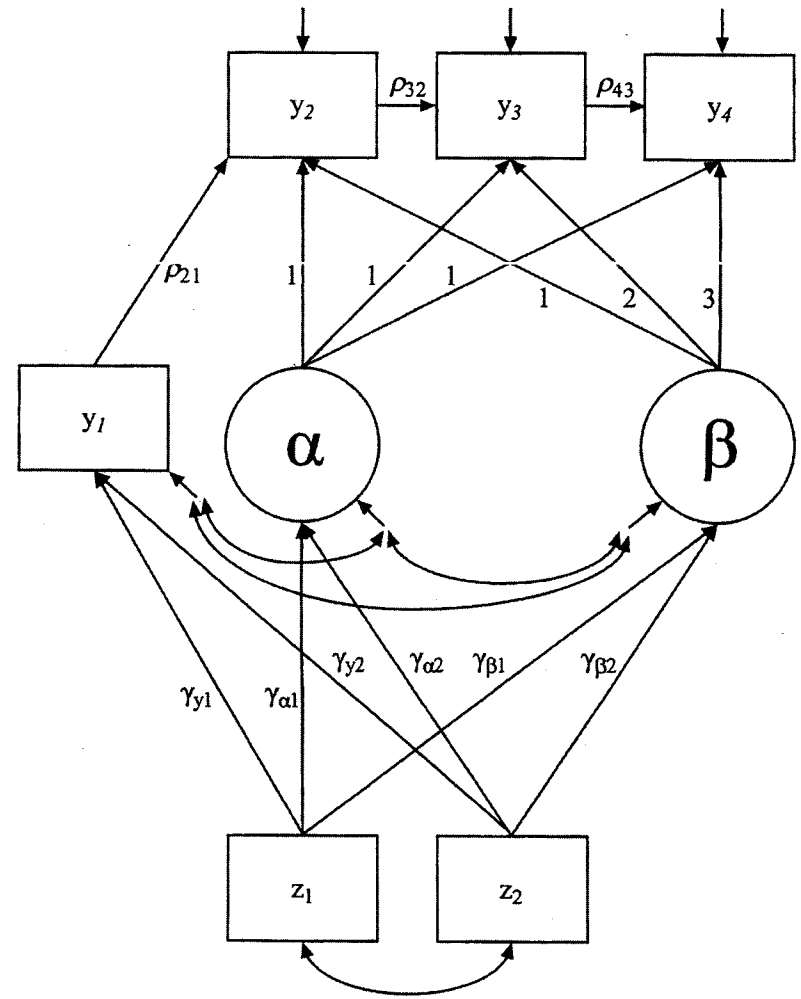

Figure 3b: Conditional ALT Model with Single Repeated Measure and Two Covariates

ε_{xit}. For this model we treat the y_{i1} and x_{i1} variables as predetermined such that

$$y_{i1} = \nu_{y1} + \varepsilon_{yi1} \tag{23}$$

$$x_{i1} = \nu_{x1} + \varepsilon_{xi1} \tag{24}$$

Finally, the random intercepts and slopes for y_{it} are expressed as

$$\alpha_{yi} = \mu_{y\alpha} + \zeta_{y\alpha i} \tag{25}$$
$$\beta_{yi} = \mu_{y\beta} + \zeta_{y\beta i} \tag{26}$$

and the random intercepts and slopes for x_{it} are expressed as

$$\alpha_{xi} = \mu_{x\alpha} + \zeta_{x\alpha i} \tag{27}$$
$$\beta_{xi} = \mu_{x\beta} + \zeta_{x\beta i} \tag{28}$$

where the disturbances for all intercepts and slopes have means of zero. Figure 4 is the path diagram of this model for four waves of data.

An examination of the Equations 21 and 22, 7 and 8, and 2 and 3 reveal that they are a synthesis of the bivariate cross-lagged model and the bivariate latent trajectory model. In addition to permitting a latent trajectory model with separate random intercepts and slopes for each variable series, the bivariate ALT model allows a lagged autoregressive effect and cross-lagged effect. This hybrid model leads to considerable flexibility not available in either the latent trajectory or autoregressive modeling framework separately. Through a series of restrictions analogous to those described for the univariate ALT model, we can get to either the bivariate autoregressive or the bivariate latent trajectory model. Furthermore, it is possible to have a model with an autoregressive only pattern for one variable and a latent trajectory structure for another variable. We now turn to the inclusion of covariates in the bivariate ALT model.

BIVARIATE AUTOREGRESSIVE LATENT TRAJECTORY (ALT) MODEL: CONDITIONAL

As we described for the univariate conditional ALT model, we can incorporate one or more exogenous predictors in the bivariate ALT model as well. This is again accomplished by the extension of the equations for the random trajectories. Specifically, we modify Equations 25 through 28 to include time invariant covariates z_{i1} and z_{i2} such that

$$\alpha_{yi} = \mu_{y\alpha} + \gamma_{\alpha y1} z_{i1} + \gamma_{\alpha y2} z_{i2} + \zeta_{y\alpha i} \tag{29}$$
$$\beta_{yi} = \mu_{y\beta} + \gamma_{\beta y1} z_{i1} + \gamma_{\beta y2} z_{i2} + \zeta_{y\beta i} \tag{30}$$

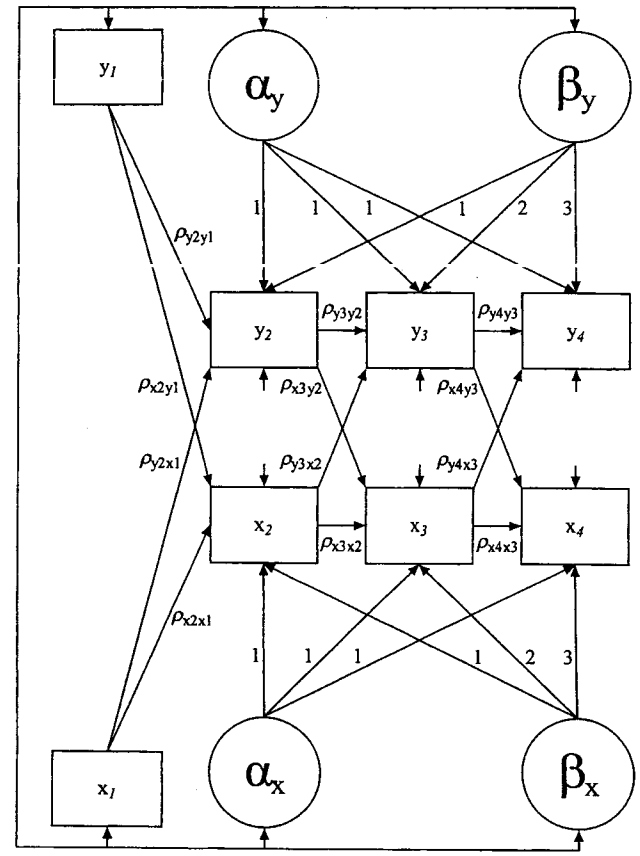

Figure 4: Autoregressive Latent Trajectory (ALT) Model for Two Series of Repeated Measures Including Lagged Effects Between Indicators

and

$$\alpha_{xi} = \mu_{x\alpha} + \gamma_{\alpha x1} z_{i1} + \gamma_{\alpha x2} z_{i2} + \zeta_{x\alpha i} \tag{31}$$
$$\beta_{xi} = \mu_{x\beta} + \gamma_{\beta x1} z_{i1} + \gamma_{\beta x2} z_{i2} + \zeta_{x\beta i} \tag{32}$$

As before, the set of gammas represent the fixed regressions of the random trajectory components on the two correlated exogenous variables. Though we do not show it here, it is possible to have the random intercepts or random slopes as explanatory variables in the above equations.

If the initial repeated measure for x and y are treated as endogenous, no further modifications are necessary. However, if the initial repeated measures are treated as predetermined, we must again regress x_{i1} and y_{i1} on the set of exogenous measures. Thus, the initial measures for x_{i1} and y_{i1} are

$$y_{i1} = \nu_{y1} + \gamma_{y1} z_{i1} + \gamma_{y2} z_{i2} + \varepsilon_{yi1} \tag{33}$$

$$x_{i1} = \nu_{x1} + \gamma_{x1} z_{i1} + \gamma_{x2} z_{i2} + \varepsilon_{xi1} \tag{34}$$

The same assumptions described for the univariate conditional ALT model hold here as well. Figure 5 is a path diagram example of the model for four waves of data.

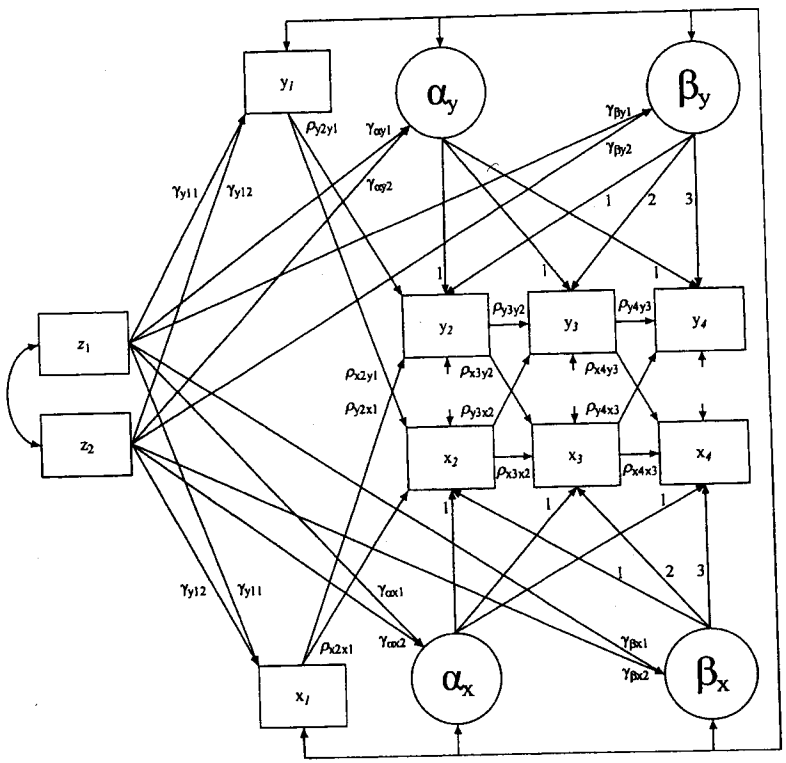

Figure 5: Conditional ALT Model for Two Repeated Measures and Two Covariates Including Lagged Effects Between Indicators

GENERAL EQUATION FOR ALL MODELS

Our goal in this section is to develop a general matrix expression that allows for the representation of a broad class of longitudinal models including the autoregressive, latent trajectory, and the autoregressive latent trajectory models in a single expression. Such a general expression allows for a unified framework to approach model identification, model estimation, and model fit for a variety of model parameterizations.[7] The starting point is a general equation from which we can impose restrictions in order to derive all of the models that we have so far discussed. The model we use has two equations:

$$\boldsymbol{\eta}_i = \boldsymbol{\mu} + \mathbf{B}\boldsymbol{\eta}_i + \boldsymbol{\zeta}_i \tag{35}$$

$$\mathbf{o}_i = \mathbf{P}\boldsymbol{\eta}_i \tag{36}$$

where the first equation provides the structural relations between variables, η_i is a vector that contains both the repeated measures and the random intercepts and random slopes, μ is a vector of means or intercepts, $\mathbf{B}$ is a coefficient matrix that gives the coefficients for the relationships of η_i on each other, and ζ_i is the disturbance vector for the variables in η_i. We assume that $E(\zeta_i) = \mathbf{0}$. The nature of the covariances of ζ_i with η_i will vary depending on the model, but for identification purposes at least some of these covariances will be zero or known values. The second equation functions to pick out the observed variables, $\mathbf{o}_i$, from the latent variables of Equation 35.

More specifically,

$$\boldsymbol{\eta}_i = \begin{bmatrix} \mathbf{y}_i \\ \mathbf{x}_i \\ \mathbf{z}_i \\ \boldsymbol{\alpha}_i \\ \boldsymbol{\beta}_i \end{bmatrix} \tag{37}$$

where $\mathbf{y}_i$ and $\mathbf{x}_i$ are two variables repeatedly measured for T time periods, $\mathbf{z}_i$ is a q x 1 vector of exogenous determinants of the latent trajectory parameters or of the repeated measures, $\boldsymbol{\alpha}_i$ is the 2 x 1

vector of α_{yi} and α_{xi}, the random intercepts for the two sets of repeated measures, and $\boldsymbol{\beta}_i$ is the 2 x 1 vector of β_{yi} and $\boldsymbol{\beta}_{xi}$ the random slopes for the two repeated measures. The μ vector is

$$\boldsymbol{\mu} = \begin{bmatrix} \boldsymbol{\mu}_y \\ \boldsymbol{\mu}_x \\ \boldsymbol{\mu}_z \\ \boldsymbol{\mu}_\alpha \\ \boldsymbol{\mu}_\beta \end{bmatrix} \tag{38}$$

where $\boldsymbol{\mu}_y$ and $\boldsymbol{\mu}_x$ are vectors of means/intercepts for the $\mathbf{y}_i$ and $\mathbf{x}_i$ observed repeated measures, $\boldsymbol{\mu}_z$ is the vector of means for the exogenous covariates in the model, $\boldsymbol{\mu}_\alpha$ is a vector of means/intercepts for the random intercepts, $\boldsymbol{\alpha}_{yi}$ and $\boldsymbol{\alpha}_{xi}$, and $\boldsymbol{\mu}_\beta$ is a vector of the means/intercepts of β_{yi} and β_{xi}.

The **B** matrix is

$$\mathbf{B} = \begin{bmatrix} \mathbf{B}_{yy} & \mathbf{B}_{yx} & \mathbf{B}_{yz} & \mathbf{B}_{y\alpha} & \mathbf{B}_{y\beta} \\ \mathbf{B}_{xy} & \mathbf{B}_{xx} & \mathbf{B}_{xz} & \mathbf{B}_{x\alpha} & \mathbf{B}_{x\beta} \\ \mathbf{B}_{zy} & \mathbf{B}_{zx} & \mathbf{B}_{zz} & \mathbf{B}_{z\alpha} & \mathbf{B}_{z\beta} \\ \mathbf{B}_{\alpha y} & \mathbf{B}_{\alpha x} & \mathbf{B}_{\alpha z} & \mathbf{B}_{\alpha\alpha} & \mathbf{B}_{\alpha\beta} \\ \mathbf{B}_{\beta y} & \mathbf{B}_{\beta x} & \mathbf{B}_{\beta z} & \mathbf{B}_{\beta\alpha} & \mathbf{B}_{\beta\beta} \end{bmatrix} \tag{39}$$

where the double subscript notation in the partition matrix indicates that the submatrix contains those coefficients related to effects among the subscripted variables. For instance, $\mathbf{B}_{yy}$ contains the effects of the repeated y variables on each other, and $\mathbf{B}_{\beta z}$ contains the impact of the exogenous $\mathbf{z}_i$ on the random slopes, β_{yi} and β_{xi}, for the ys and xs. In all of our models, $\mathbf{z}_i$ consists of exogenous variables so that there are no other observed or latent variables that influence them. In addition, in none of our models do the repeated measures affect the random intercepts and random slopes. So for our models the **B** matrix simplifies to

$$\mathbf{B} = \begin{bmatrix} \mathbf{B}_{yy} & \mathbf{B}_{yx} & \mathbf{B}_{yz} & \mathbf{B}_{y\alpha} & \mathbf{B}_{y\beta} \\ \mathbf{B}_{xy} & \mathbf{B}_{xx} & \mathbf{B}_{xz} & \mathbf{B}_{x\alpha} & \mathbf{B}_{x\beta} \\ \mathbf{0} & \mathbf{0} & \mathbf{0} & \mathbf{0} & \mathbf{0} \\ \mathbf{0} & \mathbf{0} & \mathbf{B}_{\alpha z} & \mathbf{B}_{\alpha\alpha} & \mathbf{B}_{\alpha\beta} \\ \mathbf{0} & \mathbf{0} & \mathbf{B}_{\beta z} & \mathbf{B}_{\beta\alpha} & \mathbf{B}_{\beta\beta} \end{bmatrix} \tag{40}$$

The disturbance vector for equation 35 is

$$\boldsymbol{\zeta}_i = \begin{bmatrix} \boldsymbol{\epsilon}_{yi} \\ \boldsymbol{\epsilon}_{xi} \\ \boldsymbol{\epsilon}_{zi} \\ \boldsymbol{\zeta}_{\alpha i} \\ \boldsymbol{\zeta}_{\beta i} \end{bmatrix}, \tag{41}$$

with covariance matrix $\boldsymbol{\Sigma}_{\zeta\zeta}$. The **P** matrix is

$$\mathbf{P} = \begin{bmatrix} \mathbf{I}_T & \mathbf{0} & \mathbf{0} & \mathbf{0} & \mathbf{0} \\ \mathbf{0} & \mathbf{I}_T & \mathbf{0} & \mathbf{0} & \mathbf{0} \\ \mathbf{0} & \mathbf{0} & \mathbf{I}_q & \mathbf{0} & \mathbf{0} \end{bmatrix}, \tag{42}$$

where $\mathbf{I}_T$ is a T x T identity matrix with dimensions that depend on the number of repeated measures and $\mathbf{I}_q$ is a q x q identity matrix with q exogenous variables. The matrix picks out the observed variables in a given model where $\mathbf{o}_i$ is

$$\mathbf{o}_i = \begin{bmatrix} \mathbf{y}_i \\ \mathbf{x}_i \\ \mathbf{z}_i \end{bmatrix}. \tag{43}$$

We next illustrate how placing restrictions on this general model will lead to some of the simpler models described in earlier sections and will then logically generalize to the proposed ALT framework.

EXAMPLES OF GENERAL NOTATION

STANDARD AUTOREGRESSIVE MODEL

When we have a single repeated measure for T time periods and we are only interested in the autoregressive model without a latent trajectory component, we can remove all vectors from η_i except $\mathbf{y}_i$ which results in

$$\boldsymbol{\eta}_i = [\mathbf{y}_i] \tag{44}$$

$$\boldsymbol{\mu} = [\boldsymbol{\mu}_y] \tag{45}$$

$$\mathbf{B} = [\mathbf{B}_{yy}] \tag{46}$$

$$\boldsymbol{\zeta}_i = [\boldsymbol{\epsilon}_i] \tag{47}$$

$$\mathbf{o}_i = \boldsymbol{\eta}_i \tag{48}$$

Looking more closely at the coefficient matrix, we have

$$\mathbf{B}_{\mathbf{yy}} = \begin{bmatrix} 0 & 0 & 0 & \cdots & 0 \\ \rho_{21} & 0 & 0 & \cdots & 0 \\ 0 & \rho_{32} & 0 & \cdots & 0 \\ \vdots & \vdots & \ddots & \ddots & \vdots \\ 0 & 0 & \cdots & \rho_{T,T-1} & 0 \end{bmatrix} \tag{49}$$

to capture a first-order autoregressive relation. We could add additional coefficients to capture higher order autoregressive processes in a straightforward manner.

UNCONDITIONAL LATENT TRAJECTORY MODEL

In the case of an unconditional latent trajectory model for $\mathbf{y}_i$, we would modify the matrices so that

$$\boldsymbol{\eta}_i = \begin{bmatrix} \mathbf{y}_i \\ \boldsymbol{\alpha}_i \\ \boldsymbol{\beta}_i \end{bmatrix} \tag{50}$$

$$\boldsymbol{\mu} = \begin{bmatrix} \mathbf{0} \\ \boldsymbol{\mu}_\alpha \\ \boldsymbol{\mu}_\beta \end{bmatrix} \tag{51}$$

where the $\mathbf{0}$ vector in $\boldsymbol{\mu}$ represents the zero fixed intercepts for the repeated measures in a latent trajectory model. The $\mathbf{B}$ matrix is

$$\mathbf{B} = \begin{bmatrix} \mathbf{0} & \mathbf{B}_{y\alpha} & \mathbf{B}_{y\beta} \\ \mathbf{0} & \mathbf{0} & \mathbf{0} \\ \mathbf{0} & \mathbf{0} & \mathbf{0} \end{bmatrix} \tag{52}$$

where

$$\bar{\mathbf{B}}_{y\alpha} = \begin{bmatrix} 1 \\ 1 \\ \vdots \\ 1 \end{bmatrix} \qquad \bar{\mathbf{B}}_{y\beta} = \begin{bmatrix} 0 \\ 1 \\ \vdots \\ T-1 \end{bmatrix}. \tag{53}$$

The remaining matrices are

$$\boldsymbol{\zeta}_i = \begin{bmatrix} \boldsymbol{\epsilon}_i \\ \zeta_{\alpha i} \\ \zeta_{\beta i} \end{bmatrix} \tag{54}$$

$$\mathbf{P} = [\,\mathbf{I}\ \mathbf{0}\ \mathbf{0}\,]. \tag{55}$$

Thus the standard unconditional LTM can be fully parameterized by placing specific restrictions on the general matrix expression.

UNCONDITIONAL UNIVARIATE ALT MODEL

The unconditional ALT model for a single repeated measure in this notation defines $\mathbf{B}$ as

$$\mathbf{B} = \begin{bmatrix} \mathbf{B}_{\mathbf{yy}} & \mathbf{B}_{y\alpha} & \mathbf{B}_{y\beta} \\ \mathbf{0} & \mathbf{0} & \mathbf{0} \\ \mathbf{0} & \mathbf{0} & \mathbf{0} \end{bmatrix} \tag{56}$$

where $\mathbf{B}_{\mathbf{yy}}$ matches Equation 49 and

$$\mathbf{B}_{y\alpha} = \begin{bmatrix} 0 \\ 1 \\ \vdots \\ 1 \end{bmatrix} \qquad \mathbf{B}_{y\beta} = \begin{bmatrix} 0 \\ 1 \\ \vdots \\ T-1 \end{bmatrix} \tag{57}$$

for a model where y_{1i} is predetermined. In addition we have

$$\boldsymbol{\mu} = \begin{bmatrix} \boldsymbol{\mu}_y \\ \mu_\alpha \\ \mu_\beta \end{bmatrix} \tag{58}$$

with

$$\boldsymbol{\mu}_y = \begin{bmatrix} \mu_{y1} \\ 0 \\ \vdots \\ 0 \end{bmatrix} \tag{59}$$

and

$$\zeta_i = \begin{bmatrix} \epsilon_i \\ \zeta_{\alpha i} \\ \zeta_{\beta i} \end{bmatrix}. \tag{60}$$

The variances of ϵ_{1i}, $\zeta_{\alpha i}$, and $\zeta_{\beta i}$ are equal to the variances of the predetermined variables, y_{1i}, α_i, and β_i, respectively.

CONDITIONAL MULTIVARIATE AUTOREGRESSIVE LATENT TRAJECTORY MODEL

As an example of the general notation for a more complicated model consider the conditional, ALT model for two repeated measures. The $\boldsymbol{\eta}_i$, $\boldsymbol{\mu}$, $\boldsymbol{\zeta}_i$ and $\mathbf{P}$ matrices are the same as in the general model in Equations 37, 38, 41, and 42, respectively. The $\mathbf{B}$ matrix is

$$\mathbf{B} = \begin{bmatrix} \mathbf{B}_{yy} & \mathbf{B}_{yx} & \mathbf{B}_{yz} & \mathbf{B}_{y\alpha} & \mathbf{B}_{y\beta} \\ \mathbf{B}_{xy} & \mathbf{B}_{xx} & \mathbf{B}_{xz} & \mathbf{B}_{x\alpha} & \mathbf{B}_{x\beta} \\ \mathbf{0} & \mathbf{0} & \mathbf{0} & \mathbf{0} & \mathbf{0} \\ \mathbf{0} & \mathbf{0} & \mathbf{B}_{\alpha z} & \mathbf{0} & \mathbf{0} \\ \mathbf{0} & \mathbf{0} & \mathbf{B}_{\beta z} & \mathbf{0} & \mathbf{0} \end{bmatrix} \tag{61}$$

where the covariates $\mathbf{z}$ directly affect the random intercepts and random slopes and the random intercepts and slopes directly affect the repeated measures.

SUMMARY

To summarize thus far, we provided a general matrix expression that allows for an explicit representation of the proposed ALT model. An added advantage is that a variety of well known models can be defined in this general expression through the use of specific restrictions on one or more of the parameter matrices. This not only highlights the logical relations among many of these alternative model parameterizations, but also allows for a unified framework to consider the implied moments, model identification, estimation and fit. It is to these that we now turn.

IMPLIED MOMENT MATRICES

We noted earlier that each model has an implied covariance matrix ($\boldsymbol{\Sigma}(\boldsymbol{\theta})$) and implied mean vector ($\boldsymbol{\mu}(\boldsymbol{\theta})$) that provide functions of the model parameters that exactly predict the population covariance matrix and the mean vector for the observed variables. To find these implied moment matrices for all three models, we make use of the reduced form of Equation 35:

$$\boldsymbol{\eta}_i = (\mathbf{I} - \mathbf{B})^{-1}(\boldsymbol{\mu} + \boldsymbol{\zeta}_i) \tag{62}$$

We then substitute this equation in for η_i in equation 36 and this leads to,

$$\mathbf{o}_i = \mathbf{P}(\mathbf{I} - \mathbf{B})^{-1}(\boldsymbol{\mu} + \boldsymbol{\zeta}_i). \tag{63}$$

From this it follows that the implied mean vector of the observed variables is

$$\boldsymbol{\mu}(\boldsymbol{\theta}) = E(\mathbf{o}_i) = \mathbf{P}(\mathbf{I} - \mathbf{B})^{-1}\boldsymbol{\mu} \tag{64}$$

and the implied covariance matrix of observed variables is

$$\begin{aligned} \boldsymbol{\Sigma}(\boldsymbol{\theta}) &= [E(\mathbf{o}_i\mathbf{o}_i') - E(\mathbf{o}_i)E(\mathbf{o}_i')] \\ &= \mathbf{P}(\mathbf{I} - \mathbf{B})^{-1}\boldsymbol{\Sigma}_{\zeta\zeta}(\mathbf{I} - \mathbf{B})^{-1\prime}\mathbf{P}'. \end{aligned} \tag{65}$$

By substituting the values of the matrices and vectors that correspond to the AR, LT, and ALT models, we can use Equations 64 and 65 to find the implied moments for each of these models.

These implied moment matrices are helpful in determining the identification of the model parameters, in testing the model fit, and in parameter estimation. Consider identification. Identification concerns whether it is possible to find unique values for the model parameters in $\boldsymbol{\theta}$ when we have the population moments ($\boldsymbol{\mu}$ and $\boldsymbol{\Sigma}$) of the observed variables. If so, the model is identified. If not, the model is underidentified. For instance, if we impose the constraints on Equation 35 that lead us to the AR model, we can see that this model will be identified with only two waves of data. This is not surprising since the univariate two wave AR model is essentially a simple regression model. Having greater than two waves of data leads to an overidentified model.

Turning to the univariate LT case and substituting into the implied moment matrices in Equations 64 and 65 we find that the model will be identified with three or more waves of data. Identification of the univariate ALT model is more demanding. In the case where the y_{i1} variable is predetermined, we need five waves of data to identify the ALT model without any further restrictions on the model parameters. Five waves of data also are sufficient to identify the conditional ALT model as well.

Each wave of data is extremely costly in many areas of research. Therefore it is valuable to examine the conditions under which a univariate ALT model is identified with fewer than five waves of data. We restrict ourselves to the unconditional ALT model, but the conditions we describe are sufficient to identify the conditional ALT model. We now turn to this issue.

FOUR WAVES AUTOREGRESSIVE LATENT TRAJECTORY MODEL

The unconditional univariate, four wave ALT model is not identified unless we add an additional assumption. One common assumption in AR models is that the autoregressive coefficient is equal over time ($\rho = \rho_{y_2y_1} = \rho_{y_3y_2} = \rho_{y_4y_3}$). When we have four indicators, y_{i1}, y_{i2}, y_{i3}, and y_{i4}, we can identify the model. The four wave model with a linear trajectory is [i.e., $\Lambda_{t2} = t - 1$]

$$y_{it} = \alpha_i + (t-1)\beta_i + \rho y_{i,t-1} + \varepsilon_{it} \tag{66}$$

where $t = 2, 3, 4$. Taking the means of the endogenous y_{i2}, y_{i3}, and y_{i4}, we can rewrite these equations in a matrix expression to get:

$$\begin{bmatrix} \mu_{y_2} \\ \mu_{y_3} \\ \mu_{y_4} \end{bmatrix} = \begin{bmatrix} 1 & 1 & \mu_{y_1} \\ 1 & 2 & \mu_{y_2} \\ 1 & 3 & \mu_{y_3} \end{bmatrix} \begin{bmatrix} \mu_\alpha \\ \mu_\beta \\ \rho \end{bmatrix}. \tag{67}$$

Assuming that the 3 by 3 matrix to the right of the equal sign is nonsingular and algebraically manipulating these equations we find that

$$\begin{bmatrix} \mu_\alpha \\ \mu_\beta \\ \rho \end{bmatrix} = \begin{bmatrix} 1 & 1 & \mu_{y_1} \\ 1 & 2 & \mu_{y_2} \\ 1 & 3 & \mu_{y_3} \end{bmatrix}^{-1} \begin{bmatrix} \mu_{y_2} \\ \mu_{y_3} \\ \mu_{y_4} \end{bmatrix}. \tag{68}$$

Since the means of the observed variables (μ_{y_t}) are known to be identified, the equation demonstrates the identification of μ_α, μ_β, and ρ.

Substitution of the matrices that correspond to this ALT model into equation 65 gives the implied covariance matrix for this model. Manipulation of the equations for the variances and covariances of the y_{it} variables with each other establishes the identification of $VAR(\alpha)$, $VAR(\beta)$, $VAR(y_1)$, $COV(\alpha, \beta)$, $COV(\alpha, y_1)$, $COV(\beta, y_1)$, $VAR(\varepsilon_1)$ to $VAR(\varepsilon_4)$. In fact, the model is overidentified with one degree-of-freedom.

THREE WAVES AUTOREGRESSIVE LATENT TRAJECTORY MODEL

Under special conditions it is possible to identify the ALT model with only three waves of data. To do so requires that we treat y_{i1} as endogenous rather than as predetermined. At the first time period, we add the equation

$$y_{i1} = \alpha_i + \rho_{1,0} y_{i,0} + \varepsilon_{i0} \tag{69}$$

where $\rho_{1,0}$ is the autoregressive coefficient for the impact of $y_{i,0}$ on $y_{i,1}$. The $y_{i,0}$ occurs prior to the first wave of data that we observe. However, if we assume that the same equation holds for earlier time periods and that we have a linear trajectory model such that $\Lambda_{t2} = t - 1$, then we can solve this apparent difficulty. Substituting the equation for $y_{i,0}$ into Equation 69 we get

$$y_{i1} = \alpha_i + \rho_{1,0}(\alpha_i - 1\beta_i + \rho_{0,-1} y_{i,-1} + \varepsilon_{i,-1}) + \varepsilon_{i0} \tag{70}$$

where $\rho_{0,-1}$ is the autoregressive coefficient for the impact of $y_{i,-1}$ on $y_{i,0}$. If we substitute in the equation for $y_{i,-1}$, continue this substitution process to $-\infty$, and collect terms, we get

$$\begin{aligned} y_{i1} = {} & (1 + \rho_{1,0} + \rho_{1,0}\rho_{0,-1} + \cdots + \rho_{1,0}\rho_{0,-1}\cdots\rho_{(-\infty+1),-\infty})\alpha_i \\ & - (1 + 2\rho_{1,0} + 3\rho_{1,0}\rho_{0,-1} + \cdots + \infty\rho_{1,0}\rho_{0,-1}\cdots\rho_{(-\infty+1),-\infty})\beta_i \\ & + \rho_{1,0}\rho_{0,-1}\cdots\rho_{(-\infty+1),-\infty}y_{i,-\infty} + (\varepsilon_{i1} + \rho_{1,0}\varepsilon_{i0} + \rho_{1,0}\rho_{0,-1}\varepsilon_{i,-1} \\ & + \cdots + \rho_{1,0}\rho_{0,-1}\cdots\rho_{(-\infty+1),-\infty}\varepsilon_{i,-\infty}). \end{aligned} \tag{71}$$

Equation 71 consists of several infinite series. Assuming that these series converge such that the product $\rho_{1,0}\rho_{0,-1}\cdots\rho_{(-\infty+1),-\infty} \to 0$ as $t \to -\infty$, we can rewrite the equation using Λ_{11} and Λ_{12} as

$$\begin{aligned} y_{i1} = {} & \Lambda_{11}\alpha_i - \Lambda_{12}\beta_i + (\varepsilon_{i1} + \rho_{1,0}\varepsilon_{i0} + \rho_{1,0}\rho_{0,-1}\varepsilon_{i,-1} + \cdots \\ & + \rho_{1,0}\rho_{0,-1}\cdots\rho_{(-\infty+1),-\infty}\varepsilon_{i,-\infty}). \end{aligned} \tag{72}$$

If the autoregressive parameters, $\rho_{t,t-1}$, are equal to ρ with $|\rho| < 1$, the series does converge and the values to which the coefficients converge are $\Lambda_{11} = (1-\rho)^{-1}$ and $\Lambda_{12} = -\rho(1-\rho)^{-2}$. At first, a coefficient different than one for the α_i variable and a nonzero β_i for the first time period seems counter-intuitive since in the standard latent trajectory model these coefficients would be "1" and "0", respectively. However, the addition of the autoregressive relation undermines intuition.[8]

An alternative but equivalent perspective on these coefficients derives from a path analysis decomposition of effects. Consider the ALT model as expressed in equation 13. Although our initial measure of y was taken at time $t = 1$, there exist y variables for time periods prior to the ones for which we have data. In the standard growth modeling framework, the expected coefficients are fixed to 1.0 for α_i and 0 for β_i for the first time period $t = 1$. However, for earlier (unmeasured) time periods, the α_i remains at 1.0, but for the linear trajectory model, the β_i's coefficients follow the $\Lambda_{12} = t-1$ pattern of $-1, -2, -3\cdots$. Thus, α_i and β_i have both direct *and* indirect effects on y_{i1}. The direct effect of α_i on y_{i1} is 1.0 and that of β_i is 0. The indirect effect of α_i through y_{i0} is ρ. Its indirect effects through $y_{i,-1}$ and y_{i0} are $\rho + \rho^2$. Continuing in a similar way to earlier time periods we find the indirect effect of α_i on y_{i1} are $\rho + \rho^2 + \rho^3 + \cdots + \rho^\infty$. If we add to this, the direct effect of α_i on y_{i1} (i.e., 1), the total effects

are $1 + \rho + \rho^2 + \rho^3 + \cdots + \rho^\infty$, the same coefficient for α_i in the y_{i1} equation that we found above algebraically. Thus when we omit the earlier values of y_{it} from our model, the coefficient of α_i is the total effect coefficient. By a similar use of the tracing rule in path analysis, we find that the coefficient of β_i is the total effect of β_i on y_{i1}.

We find the implied moments for this model by using Equations 64 and 65 and substituting in the appropriate matrix values for the ALT model with an endogenous y_{i1}. By manipulating these equations we can establish the identification of the ALT model for three waves of data. For instance, the results above that show that $\Lambda_{11} = (1-\rho)^{-1}$ and $\Lambda_{12} = -\rho(1-\rho)^{-2}$ under the assumption of an equal autoregressive parameter. For three waves of data, the implied means are

$$\mu_{y_1} = \Lambda_{11}\mu_\alpha + \Lambda_{12}\mu_\beta \tag{73}$$

$$\mu_{y_2} = \mu_\alpha + \mu_\beta + \rho\mu_{y_1} \tag{74}$$

$$\mu_{y_3} = \mu_\alpha + 2\mu_\beta + \rho\mu_{y_2}. \tag{75}$$

Algebraically manipulating these equations we find that

$$\rho = \frac{2\mu_{y_2} - \mu_{y_1} - \mu_{y_3}}{2\mu_{y_1}}. \tag{76}$$

With ρ identified, then so are Λ_{11} and Λ_{12}. We then have

$$\mu_\alpha = \mu_{y_1} - 2\rho\mu_{y_1} + \rho\mu_{y_2} \tag{77}$$

and

$$\mu_\beta = \frac{\mu_{y_1} - \Lambda_{11}\mu_\alpha}{\Lambda_{12}}. \tag{78}$$

More complicated expressions show that the other parameters of the ALT model with three waves of data are identified.[9]

ESTIMATION AND TESTING

A straightforward and widely available estimator suitable for all of the models that we have considered is the Full Information Maximum Likelihood (FIML) one:

$$\begin{aligned} F_{ml} = {} & \ln|\boldsymbol{\Sigma}(\boldsymbol{\theta})| + tr[\boldsymbol{\Sigma}^{-1}(\boldsymbol{\theta})\mathbf{S}] - \ln|\mathbf{S}| \\ & - p + (\bar{\mathbf{z}} - \boldsymbol{\mu}(\boldsymbol{\theta}))'\boldsymbol{\Sigma}^{-1}(\boldsymbol{\theta})(\bar{\mathbf{z}} - \boldsymbol{\mu}(\boldsymbol{\theta})) \end{aligned} \tag{79}$$

where $\boldsymbol{\theta}$ is a vector that contains all of the parameters (i.e., coefficients, variances, and covariances of exogenous variables and errors) in the model that we wish to estimate, $\boldsymbol{\Sigma}(\boldsymbol{\theta})$ is the covariance matrix of the observed variables that is implied by the model structure, $\boldsymbol{\mu}(\boldsymbol{\theta})$ is the mean vector of the observed variables implied by the model, $\mathbf{S}$ is the sample covariance matrix of the observed variables, $\bar{\mathbf{z}}$ is the vector of sample means of the observed variables, and p is the number of observed variables in the model. General matrix expressions for the implied covariance matrix $[\boldsymbol{\Sigma}(\boldsymbol{\theta})]$ and the implied mean vector $[\boldsymbol{\mu}(\boldsymbol{\theta})]$ are in Equations 64 and 65, respectively. From these we can derive the implied covariance matrix and the implied mean vector for all of the models that we describe. The FIML estimator is available in virtually all structural equation software packages such as LISREL (Jöreskog and Sörbom 1996), AMOS (Arbuckle 1999) and EQS (Bentler 1995). The classical derivation of F_{ml} begins with the assumption that the observed variables come from multivariate normal distributions (see, e.g., Bollen, 1989a, pp.131-135). The FIML estimator of the parameters, $\widehat{\boldsymbol{\theta}}$, has several desirable properties: the estimator is consistent, asymptotically unbiased, asymptotically normally distributed, asymptotically efficient, and its covariance matrix equals the inverse of the information matrix (Lawley and Maxwell 1971).

In many situations an assumption of multivariate normal distribution for the observed variables is not realistic. The consistency of the estimator is not affected by this possible violation, though the asymptotic standard errors and test statistics might be influenced (Browne 1984). Fortunately, the FIML estimator maintains many of its desirable properties under less restrictive assumptions. For instance, Browne (1984) proves that as long as the observed variables come from distributions with multivariate kurtosis that equals that of a multivariate normal distribution, the FIML retains these properties. Even in cases of "excess" multivariate kurtosis, many researchers have described asymptotic robustness conditions where the usual FIML significance tests for coefficients and tests of overidentifying restrictions are accurate (Satorra 1990). Finally, several researchers and software packages provide asymptotic standard errors and overidentifying test statistics that correct for excess kurtosis (e.g., Satorra and Bentler 1988) or that use bootstrapping techniques (Bollen and Stine 1990; 1993) in the event that the asymptotic robustness

conditions do not hold. Thus although the FIML estimator was originally derived assuming that the observed variables come from a multivariate normal distribution, it retains its consistency under nonnormality and there are a variety of ways in which to perform significance tests for observed variables from distributions with excess kurtosis.[10]

Once an AR, LT, or ALT model is estimated, we can perform a simultaneous test of the overidentifying restrictions of the model and individual tests of the statistical significance of parameter estimates. The latter take the ratio of each parameter estimate to its asymptotic standard error and compares it to a standardized normal variable for purposes of significance testing. The former test of the overidentifying restrictions is a test of $H_0 : \boldsymbol{\Sigma} = \boldsymbol{\Sigma}(\boldsymbol{\theta})$ and $\boldsymbol{\mu} = \boldsymbol{\mu}(\boldsymbol{\theta})$ where $\boldsymbol{\Sigma}$ is the population covariance matrix of the observed variables, $\boldsymbol{\Sigma}(\boldsymbol{\theta})$ is the covariance matrix implied by the model that is a function of the parameters of the model, $\boldsymbol{\mu}$ is the population mean vector of the observed variables, and $\boldsymbol{\mu}(\boldsymbol{\theta})$ is implied mean vector that is a function of the model parameters. If the overidentifying restrictions of the model are valid, then H_0 is true. Under the null hypothesis, F_{ml} taken at the final estimates of $\widehat{\boldsymbol{\theta}}$ is asymptotically distributed as a central chi-square (i.e., χ^2) when weighted by one less than the total sample size. That is, $T_{ml} = F_{ml}(N-1)$ is asymptotically distributed as a χ^2 with degrees-of-freedom $df = (p(p+1)/2 + p) - t$ where p is the number of observed variables and t is the number of estimated parameters. This is a likelihood ratio test statistic where the restrictive model is the overidentified model hypothesized by the researcher and it is compared to a saturated model where the covariance matrix and mean vector are exactly fitted (Bollen 1989a, p.265). A significant test statistic is evidence that one or more of the overidentifying restrictions implied by the model does not hold. It also is possible to perform simultaneous tests of parameters by taking the difference in the asymptotic test statistics for two nested models where the test statistic for the least restrictive model is subtracted from the test statistic for the more restrictive one (i.e., $T_\Delta = T_2 - T_1$). Under the null hypothesis, T_Δ follows an asymptotic central χ^2 with df_Δ equal to the difference in df of the two models.[11]

Often these formal significance tests are supplemented with other fit statistics since in large samples the significance tests might have

sufficient power to detect even substantively trivial departures from the null hypothesis. There are numerous fit statistics available (Bollen and Long 1993), but here we present several that we use in our example section: the Incremental Fit Index (IFI, Bollen 1989b), 1 minus the Root Mean Square Error of Approximation ($1 - RMSEA$, Steiger and Lind, 1980), and the Akaike Information Criterion (AIC, Akaike 1987):

$$IFI = \frac{T_b - T_h}{T_b - df_h} \tag{80}$$

$$1 - RMSEA = 1 - \sqrt{\frac{T_h - df_h}{(N-1)df_h}} \tag{81}$$

$$AIC = T_h + t \tag{82}$$

where T_b and T_h are the likelihood ratio test statistics for a baseline and the hypothesized models, df_b and df_h are the df for the baseline and hypothesized models, N is the sample size and t is the number of free parameters in the model. The hypothesized model is simply the model that the researcher is testing and the baseline model is a highly restrictive model to which the fit of the hypothesized model is being compared. Typically the baseline model freely estimates the variances and means of the observed variables but forces their covariances to zero. A value of 1 is an ideal fit for the IFI and $1 - RMSEA$ whereas the model with the smallest AIC is deemed best. Although judgement is required in evaluating these fit indices, values less than .90 are typically considered to signify an inadequate fit to the data for the IFI and $1 - RMSEA$. No absolute cutoffs are proposed for the AIC. A valuable aspect of fitting these models with structural equation techniques is that the test of overidentifying restrictions and these supplemental test statistics are readily available whereas it is not unusual for AR or LT models to be fit without reporting this information when using other approaches.

EXAMPLES

Thus far we have focused on the analytical development of our proposed ALT model. We will now demonstrate the ALT model by first

evaluating simulated data previously used to compare AR and LT models, and then by evaluating empirical data to model trajectories of income over time.

ROGOSA AND WILLETT (1985) SIMULATION DATA

Rogosa and Willett (1985) presented simulated data that originated with a latent trajectory model with five waves of data. They then fit an autoregressive model to these data and found that a chi-square test of overall fit well described the data. Based on this comparison, they criticized the autoregressive model as being misleading in that it fits data that comes from a latent trajectory model "better than it should." Their article reported the covariance matrix **S** of the simulated data which we present in Table 1. We fit the univariate ALT model to these data to see whether we would find evidence of an autoregressive parameter or whether we could distinguish the true generating latent trajectory model. For this model we treated the first wave y variable as predetermined. Table 2 summarizes the results.

TABLE 1: Covariance Matrix of Simulated Data from Rogosa and Willett (1985).

$$\mathbf{S} = \begin{bmatrix} .619 & & & & \\ .453 & .595 & & & \\ .438 & .438 & .587 & & \\ .422 & .430 & .438 & .595 & \\ .406 & .422 & .438 & .453 & .619 \end{bmatrix}$$

The autoregressive parameter is not statistically significantly different from zero for any of the lags. The joint likelihood ratio test of the difference between the ALT ($T = 0.000, df = 1$) and the latent trajectory model ($T = 0.002, df = 5$) with a predetermined y_{it} and all $\rho_{t,t-1}$ set to zero is $T_\Delta = .002$ with $df_\Delta = 4$. So the ALT model provides no support for the autoregressive parameter and greater support for the latent trajectory model. Thus, applying the ALT model lends support to the true generating model. More generally, this illustrates how the new ALT model can sometimes distinguish between the autoregressive and the latent trajectory models, a possibility not considered in prior research.

TABLE 2: Estimates of the Parameters in the ALT Model for the Rogosa and Willett's (1985) Simulation Data ($N = 500$)

	Wave			
Parameter	*Two*	*Three*	*Four*	*Five*
α	1.00 (–)	1.00 (–)	1.00 (–)	1.00 (–)
β	1.00 (–)	2.00 (–)	3.00 (–)	4.00 (–)
ρ	–.002 (.082)	–.001 (.066)	–.002 (.065)	–.002 (.114)
$VAR(\varepsilon)$	.150 (.025)	.148 (.013)	.149 (.020)	.150 (.024)
R^2	.75	.75	.75	.76

INCOME DATA FROM THE NATIONAL LONGITUDINAL SURVEY OF YOUTH

Our second example utilizes data drawn from the National Longitudinal Survey of Youth (NLSY) of Labor Market Experience, a study which was initiated in 1979 by the U.S. Department of Labor to examine the transition of young people into the labor force. We extracted a subsample of data consisting of $N = 3912$ individuals assessed at two year intervals from 1986 to 1994. All subjects reported complete data at all time points. The average age in 1986 was 24.7 years ($SD = 2.2$), 52% were female and 28% were minority status as defined by the NLSY (e.g., self-reported Black or Hispanic). The outcome measure of interest was the respondent's report of total net family income for the prior calendar year. We used a square root transformation of the net income data to reduce the kurtosis and skewness of the original data. Either the autoregressive or the latent trajectory model are plausible structures for these data. We begin by fitting an unconditional ALT model to test the presence of autoregressive and trajectory components, and we extend this to include sex and minority status as exogenous predictors

UNCONDITIONAL UNIVARIATE ALT MODEL

In Table 3 we report the overall fit statistics for the autoregressive, the latent trajectory, and the ALT model for these data using the maximum likelihood fitting function. Given the large sample ($N = 3912$),

TABLE 3: Overall Fit of Autoregressive, Latent Trajectory, and Autoregressive Latent Trajectory (ALT) Models for Net Income from 1986 to 1994 ($N = 3912$)

Overall Fit	*Autoregressive*	*Latent Trajectory*	*ALT* $\rho_{t,t-1}$ *Free*	*ALT* $\rho_{t,t-1}$ *Equal*	*ALT* $\rho_{t,t-1} = 0$
T_{ml}	534.1	412.8	26.2	62.4	203.28
df	6	10	3	6	7
p-value	< .001	< .001	< .001	< .001	< .001
IFI	.95	.96	.99	.99	.98
1-RMSEA	.85	.90	.96	.95	.92
AIC	522.1	392.8	20.2	50.4	189.3

it is not surprising that the likelihood ratio test statistic (denoted T_{ml} in the table) is statistically significant for all models. However, all of the measures indicate that the fit of either of the ALT models including the ρ parameters is superior to the standard autoregressive or latent trajectory alternatives. For instance, the likelihood ratio test statistics are substantially lower relative to the corresponding df for the ALT model compared to the AR or LT. Similarly, the $[1 - RMSEA]$ increased from a marginal .85 and .90 fit for the AR and LT models, respectively, to a substantially better .96 value for the ALT model. As described earlier, we cannot perform a nested likelihood ratio test for the ALT models vs. autoregressive or the latent trajectory model vs. autoregressive; however, the IFI, $[1 - RMSEA]$ and AIC all consistently rank the ALT model as the optimally fitting model relative to the AR and LT.

We can, however, compute a nested test of the joint contribution of the autoregressive parameters within the ALT model. The difference between the test statistics for the ALT model with ρ freely estimated and the ALT model with ρ fixed to zero is $T_\Delta = 203.28 - 26.2 = 177.1$ with $df_\Delta = 7 - 3 = 4$ which is highly significant indicating the necessity to include the ρ parameters. Choosing between the two ALT models, one with the $\rho's$ free and the other where they are set equal is more difficult. The $[1 - RMSEA]$ and IFI fit indices differ little between the two models while the difference between the likelihood ratio test statistics is statistically significant and the information based measures are superior for the ALT model with unconstrained $\rho's$. The evidence suggests a tendency to favor the ALT

TABLE 4: Estimates of the Parameters in the ALT Model with Free $\rho's$ for the NLSY Data on Net Income 1986 to 1994 ($N = 3912$)

	Income				
Parameter	*1986*	*1988*	*1990*	*1992*	*1994*
α	1.00 (–)	1.00 (–)	1.00 (–)	1.00 (–)	1.00 (–)
β	0 (–)	1.00 (–)	2.00 (–)	3.00 (–)	4.00 (–)
ρ	—	.15 (.028)	.27 (.028)	.33 (.042)	.40 (.060)
$VAR(\varepsilon)$	—	1.45(.087)	1.36 (.055)	1.42 (.081)	1.45 (.122)
R^2	—	.57	.63	.64	.66

with free $\rho's$, and this is the model that we feel optimally characterizes the observed data.

The overall model fit measures are just one part of the model assessment. It also is necessary to examine the model parameter estimates and their properties when assessing a model. Table 4 reports the estimates, asymptotic standard errors, and R-squares for the income variables in each year. The magnitude of the autoregressive parameter tends to increase with time such that the impact of 1986 $\sqrt{\text{income}}$ on 1988 $\sqrt{\text{income}}$ is 0.15 while the autoregressive parameter for 1992 $\sqrt{\text{income}}$ on 1994 $\sqrt{\text{income}}$ grows to .40. This suggests an increasing ability for earlier income to predict later income as a person ages. The autoregressive relation must be interpreted in conjunction with the latent trajectory process so that, for example, for each unit change in the 1992 $\sqrt{\text{income}}$, we expect a .40 difference in the 1994 $\sqrt{\text{income}}$ *net* of the latent trajectory of an individual's income. In addition, the R^2s are moderately high ranging from .57 to .66. The $\widehat{VAR(\alpha)}$ and $\widehat{VAR(\beta)}$ (and asymp. s.e.'s) are 1.79 (.221) and 0.033 (.019) respectively. Both indicate statistically significant (1-tail, $p < .05$) individual variability in the initial income level and rate of change, though the variability in the slope has lower statistical significance than the intercepts. It is interesting to note that in the latent trajectory model without autoregression the $\widehat{VAR(\alpha)}$ and $\widehat{VAR(\beta)}$ are 1.933 and 0.122, both values much larger than their respective counterparts from the ALT model. The implication is that had we mistakenly assumed that the latent trajectory model was the one of choice, we would have estimated far more individual variability in income than is likely true.

TABLE 5: Final Parameter Estimates and Standard Errors for the Conditional ALT Model with Sex and Minority Predicting Net Income from 1986 to 1994 ($N = 3912$).

	Income: Time 1	*Income: Intercept*	*Income: Slope*
Sex	.203(.057)	.202(.063)	–.013(.019)
Minority	–.780(.064)	–.677(.079)	–.011(.030)
R^2	.04	.06	.00

CONDITIONAL UNIVARIATE ALT MODEL

The results of the unconditional ALT model indicated that the repeated measures of income were influenced by the joint contribution of a random underlying trajectory process and by a time-specific lagged regression process, the magnitude of which varied across time. We next examined these joint processes as a function of two time-invariant covariates: gender (coded 0 for female and 1 for male) and minority status (coded 0 for Caucasian and 1 for Hispanic or Black). Because we treat the initial measure of income as predetermined, we modeled these conditional influences consistent with equations 18, 19 and 20 from above. First, the hypothesized model reproduced the observed data well as evidenced by the likelihood ratio test statistics of $T_{ml} = 31.9$ with $df = 7$, $[1 - RMSEA] = .97$ and $IFI = .99$. Importantly, both sex and minority status significantly (*i.e.*, $p < .05$) predicted the predetermined measure of income and the underlying random intercept trajectory factor, but neither predicted the slope factor. The final parameter estimates and asymptotic standard errors are presented in Table 5. Specifically, males and Caucasians were significantly more likely to have a higher initial income level at both the first time point and the underlying random intercept component of the trajectory compared to females and non-Caucasians. However, there were no significant group differences in the rate of change in the trajectories of income over time and the R^2s for the initial income, intercept, and slope are low. These results further highlight the strength and flexibility of the ALT model given the simultaneous estimation of the random trajectory and the fixed lagged components along with the joint linear contribution of the exogenous covariates.

EXTENSIONS AND COMPARISONS

In the introduction we mentioned several other SEMs and related models proposed for longitudinal data. Now that we have finished presenting the basic ALT model, we would like to contrast the ALT model with these other efforts. More specifically we compare the ALT model to the latent curve model with autoregressive disturbances (e.g., Goldstein et al. 1994) and with two other recent SEM approaches to longitudinal data: the latent difference score model of McArdle and Hamagami (2001) and the STARTS model of Kenny and Zautra (2001).

The autoregressive disturbance in latent curve models is discussed in several sources (e.g., Goldstein et al. 1994; Diggle et al. 1994). Using our notation, we can write it as

$$y_{it} = \alpha_i + \lambda_t \beta_i + \varepsilon_{it} \tag{83}$$

$$\varepsilon_{it} = \rho \varepsilon_{it-1} + \nu_{it} \tag{84}$$

where ν_{it} has a mean of zero and is uncorrelated with ε_{it-1}, α_i, and β_i. Here the autoregressive effect is the disturbance's relation to its immediate prior value. This model differs from the ALT model in several ways. First, the ALT model applies when the prior value of the repeated measure has a direct effect on the current one whereas the autoregressive disturbance latent curve model is appropriate if the *disturbances* have a lagged relation, not the repeated measures. For instance, if each individual has a distinct income trajectory and prior income influences current income, then the ALT model is appropriate. Alternatively, if distinct income trajectories are present but there is no impact of prior income level on current income and there is an autoregressive relation of the disturbances for income over time then the autoregressive disturbance is appropriate. Another way to describe this is that with the ALT model the combined " explained" and "unexplained" parts of the repeated measures are autocorrelated whereas with the autoregressive disturbance only the unexplained component is autoregressive.

Second, the autoregressive disturbance latent curve model usually assumes that the autoregressive parameter linking the disturbances is equal over time. In the ALT model the autoregressive parameter is permitted to differ by time, though with short series the equal

autoregressive parameter assumption might be necessary to permit identification as we previously discussed. Third, the connection between the ALT model and the widely used autoregressive model is relatively straightforward whereas it is not with the autoregressive latent curve model, especially when there are additional explanatory variables in the model. With sufficient waves of data and restrictions, it would be possible to add an autoregressive disturbance to the ALT model.[12]

To facilitate our comparison of the ALT model to the latent difference score (McArdle and Hamagami 2001) and the STARTS (Kenny and Zautra 2001) models, we need to extend the ALT model to the case where the repeated measures are latent variables rather than observed. In this case, the unconditional Level 1 model is

$$L_{it} = \alpha_i + \Lambda_{t2}\beta_i + \rho_{t,t-1} L_{i,t-1} + \varepsilon_{it} \tag{85}$$

where L is the over time latent variable and the model assumptions for the disturbances are the same as earlier [compare to equation (13)]. We permit (but do not show) a measurement equation where we can have multiple measures of L_{it} for each time period.[13]

Rewriting McArdle and Hamagami's (2001) latent difference score model (see their Figure 5.2, p. 143 or Equation 5.3, p. 147) using our notation leads to[14]

$$(L_{it} - L_{i,t-1}) = \alpha_i + (\rho - 1) L_{i,t-1}. \tag{86}$$

By adding $L_{i,t-1}$ to both sides we get

$$L_{it} = \alpha_i + \rho L_{i,t-1}. \tag{87}$$

Comparing equation (86) to the latent ALT equation (85), we can derive the latent difference score equation by setting $\rho_{t,t-1}$ equal for all time points, $\Lambda_{t2}\beta_i = 0$, and $\varepsilon_{it} = 0$. In addition, the latent difference score model assumes a single indicator for each L_{it}. Thus the latent difference score equation results when we impose restrictions on the latent ALT model. In fact, these models are nested permitting nested likelihood ratio comparisons.

The State-Trait Model discussed in Kenny and Zautra (2001, p. 247, Figure 8.2) in a notation comparable to ours is

$$L_{it} = \rho_{t,t-1} L_{i,t-1} + \varepsilon_{it} \tag{88}$$

$$y_{it} = T_i + L_{it} + \delta_{it} \tag{89}$$

where T_i is the time invariant "trait" variable and δ_{it} is an error with a mean of zero and uncorrelated with T_i, L_{it}, and ε_{it}. If we just compare the latent variable ALT equation ((88), we can get the State-Trait equation by restricting the latent ALT equation such that $\alpha_i = 0$ and $\Lambda_{t2}\beta_i = 0$. However, the State-Trait equation (89) differs from the measurement equations that we use for the latent ALT model in at least two ways. One is that the State-Trait equation (89) includes a time-invariant trait variable T_i that is absent from the ALT measurement equations. The second is that the ALT model permits multiple indicators whereas the State-Trait model has a single indicator for each time period. Comparison to other longitudinal models would be possible, but the preceding illustrates the features of the ALT that distinguish it from other models.

In sum, there are both similarities and dissimilarities between the ALT model and important alternative longitudinal models. Though we have shown formal connections between these, one model might be preferred over the other based on substantive and theoretical considerations. For instance, a researcher interested in studying change in a latent variable might prefer latent difference scores provided that the assumptions of the model are plausible for the application. Alternatively a researcher believing that each case in the sample has a distinct trajectory, but that there are additional effects due to prior values of the repeated measure, should find the ALT model well-suited to the problem. In brief, both theory and the empirical characteristics of the observed data should be closely considered when selecting the optimal analytical model.

CONCLUSIONS

The autoregressive model and the latent trajectory model are two well developed techniques designed to analyze repeated measures data over time. In some fields these two modeling strategies have been presented as distinct analytical frameworks that are in competition with one another. Our position is that each model has appealing intuitive characteristics. The autoregressive incorporates the well-known phenomenon that the prior value of a variable is often the best predictor of the current one. The latent trajectory model's appeal lies in

its allowance of distinct random coefficients to govern the trajectory of different individuals rather than assuming that all are governed by the same process in the same way. Here we have reviewed each of these models and have proposed a synthesis to form the Autoregressive Latent Trajectory (ALT) Model. It shares with the autoregressive model the ability to include knowledge of the past value of a variable to predict its current values. It is like the latent trajectory model in that individual variability is allowed through the random coefficients governing the trajectory process. Furthermore, researchers can compare the ALT model to the autoregressive and latent trajectory ones to evaluate which optimally describes a data set.

We discussed the conditions under which the univariate ALT model is identified. With five or more waves of data, the model is identified while treating the wave one y variable as predetermined without making further assumptions. An identified model for four waves of data results under the same conditions if we assume a constant autoregressive parameter. Finally, if we have only three waves of data, we can have an identified model when we assume an equal autoregressive parameter throughout the past, make the wave one y_{i1} endogenous, and introduce nonlinear constraints for the first wave. Furthermore it generalizes to two or more variables and thereby encompasses the autoregressive model with cross-lags and the multivariate latent trajectory models.

Though we do not treat further extensions of the ALT model here, there are a number of other situations in which this modeling framework may provide rigorous tests of research hypotheses. For example, we can estimate the ALT model using a multiple group procedure to test for interactions between discrete subgroups and ALT model parameters. Nonlinear growth functions can easily be incorporated with the addition of higher order polynomial functions of time. If data are missing at random (MAR), a direct maximum likelihood estimation procedure (Arbuckle 1996) or multiple imputation (Little and Rubin 1987) would permit the use of this model. Finally, as we illustrate in the prior section we can apply the ALT model to situations in which the repeated measure construct is operationalized via multiple indicator latent variables to evaluate dimensionality and estimate measurement error. All of these extensions can be accomplished using recent developments in standard structural equation modeling

software using the methods of estimation and testing described earlier.

In sum, we believe that the ALT model provides a powerful and flexible approach to the empirical evaluation of a variety of longitudinal research hypotheses in applied social science research. Indeed, within nearly any situation in which either the autoregressive or the latent trajectory model might be applied, the ALT model provides the potential to synthesize aspects of these two approaches as opposed to selecting just one or the other. The ALT model thus allows for the testing of a variety of competing models with the goal of optimally reproducing the characteristics of the observed data using the most parsimonious model possible. Furthermore it provides a model of change that recognizes both individual trajectories as well as the effect of earlier values in determining the course of repeated measures.

NOTES

1. These are distinct from models with autoregressive disturbances. Specifically, whereas the autoregressive model applies when the prior value of the repeated measure has a direct effect on the current one, the autoregressive disturbance latent curve model has lagged relations between the *disturbances* of the repeated measures. See Goldstein, Healy and Rasbash (1994) and Diggle, Liang, and Zeger (1994) and later in this article for further discussion.

2. See Curran and Bollen (2001) and Rodebaugh, Curran, and Chambless (2002) for a detailed substantive application of this model.

3. In general we assume that $|\rho_{t,t-1}| < 1$ to ensure that y_{it} does not grow infinitely as t goes to infinity. In the time series literature, this is a stationarity condition (e.g., Box and Jenkins 1976). In nonstationary data, the autoregressive parameter can equal or exceed one but in our experience such nonstationary series are rare in panel data. This condition is not critical for our developments here.

4. Typically researchers use the latent trajectory model to characterize the time period of analysis. Extrapolating beyond these time periods complicates matters. For example, given the linear increase of Λ_{t2} $(= t - 1)$ with time, the $|E(y_{it})|$ goes to infinity as $t \to \infty$ provided that β_i is not zero. However a nonlinear trajectory such that $\Lambda_{t2} \to c$ as $t \to \infty$ where c is some constant, will be asymptotically stable. Except where explicitly noted, we use these models to describe the time period of the data.

5. The $E(y_{it})$ and $E(x_{it})$ are unbounded with respect to time for *linear* trajectory models for the same reasons given for the univariate LT model. In practice, researchers focus on the period for which the data are observed and rarely extrapolate beyond this period.

6. Note that this lagged regression is modeled in the observed variables and *not* in the residuals.

7. Our motivation for the development of a general matrix expression is in no way related to the implementation of these models in any given software package. Instead, this is strictly developed as a unified framework for the analytical representation of all of the models considered here. See Jöreskog (1973) or Bentler and Weeks (1980) for alternative SEM notations.

8. Earlier we noted that the usual linear trajectory model (without autoregresson) would tend to lead to an impossibly large value of the repeated measure if extrapolated too far from the actual time of data collection. This might suggest that the ALT model would have the same characteristic. However, provided that $|\rho| < 1$ the infinite series will converge to the values given in the text.

9. One complication in estimating the ALT model with y_{i1} endogenous is that it requires nonlinear constraints for the values of Λ_{11} and Λ_{12}. Among the structural equation modeling software that estimates the models we describe in this paper, CALIS in SAS (SAS Institute Inc. 2000) and LISREL (Jöreskog and Sörbom 1996) are two widely available software packages that currently allow nonlinear constraints. Another complication is that the values of the repeated measures in an ALT model are not bounded when the latent curve part of the model follows a linear trajectory (or any member of the polynomial family). This is true even when $|\rho| < 1$.We note that the linear trajectory assumption and the constant ρ value might be reasonable for short periods of time, but less realistic for longer time periods. If this is the case, the above results will at best be only approximately correct.

10. Another alternative to handle excess kurtosis are distribution free estimators (also call Weighted Least Squares) that take explicit account of the excessive kurtosis (Browne 1984). In practice, this estimator works best in large samples with models with not too many parameters.

11. If the robustness conditions do not hold, the researcher should make use of either bootstrapping procedures (see Bollen and Stine 1993) or the corrected chi-square procedures (see Satorra and Bentler 1988) for these chi-square tests.

12. Hamaker (2003) describes a special case where the ALT model and the autoregressive disturbance latent trajectory model can be equated. This is possible with an ALT model with equal $\rho_{t,t-1}$s, with y_{i1} endogenous. See Hamaker (2003) for the details. However in the more general case the ALT model and the autoregressive disturbance in latent curve models will differ.

13. In general we would expect that the errors for the same measure to correlate over time when estimating such a model. An extension of the ALT model to multiple indicator models would be a straigthforward extension and we do not show the measurement model here.

14. McArdle and Hamagami (2001, p.155) note that for identification purposes their slope term alpha must be set to 1 or the variance of s_n must be set to 1. We choose the former to make the comparison of their equation and ours easier to see. Note also that their model is designed to model difference scores rather than levels.

REFERENCES

Akaike, H. 1987. "Factor analysis and AIC." *Psychometrika 52:* 317-332.

Anderson, T.W. 1960. "Some stochastic process models for intelligence test scores." In *Mathematical methods in the social sciences,* edited by Kenneth J. Arrow, Samuel Karlin, and Patrick Suppes. Stanford, CA: Stanford University Press.

Arbuckle, James L. 1996. "Full information estimation in the presence of incomplete data." In *Advanced structural equation modeling: Issues and techniques*. Mahwah, edited by G.A. Marcoulides and R.E. Schumacker. NJ: Lawrence Erlbaum Associates.

Arbuckle, James L. 1999. *Amos 4 users' guide*. Chicago: Smallwaters Corporation.

Bast, J. and Reitsma, P. 1997. "Matthew effects in reading: A comparison of latent growth curve models and simplex models with structured means." *Multivariate Behavioral Research 32:* 135-167.

Bentler, Peter. M. 1995. EQS: *Structural equations program manual*, Version 5.0. Los Angeles, BMDP Statistical Software.

Bentler, Peter. M., and Weeks, D.G. 1980. "Linear structural equations with latent variables." *Psychometrika 45:* 289-308.

Bohrnstedt, George W. 1969. "Observations on the measurement of change." *Sociological Methodology 1:*113-36.

Bollen, Kenneth A. 1989a. *Structural equation models with latent variables*. NY: Wiley.

Bollen, Kenneth A. 1989b. "A new incremental fit index for general structural equation models." *Sociological Methods & Research 17*: 303-316.

Bollen, Kenneth A., and Long, J.Scott. 1993. *Testing structural equation models*. Newbury Park, CA: Sage Publications.

Bollen, Kenneth A., and Stine, Robert A. 1990. "Direct and indirect effects: Classical and bootstrap estimates of variability". *Sociological Methodology 20:* 115-140.

Bollen, Kenneth A., and Stine, Robert A. 1993. "Bootstrapping goodness-of-fit measures in structural equation models". Pp.111-135, in *Testing structural equation models*, edited by Kenneth A. Bollen and J.Scott Long. Newbury Park, CA: Sage Publications.

Box, George E. P., and Jenkins, Gwilym 1976. *Time Series Analysis: Forecasting and Control*. Holden-Day.

Browne, Michael W. 1984. "Asymptotically distribution-free methods for the analysis of covariance structures." *British Journal of Mathematical & Statistical Psychology* 37: 62-83.

Browne, Michael W., and du Toit, S.H.C. 1991. "Models for learning data." Pp. 47-68, In *Best methods for the analysis of change: Recent advances, unanswered questions, future directions*, edited by Linda Collins and John Horn. Washington, DC: APA.

Campbell, D.T. 1963. "Form description to experimentation: Interpreting trends as quasi-experiments." In *Problems in measuring change*, edited by Chester W. Harris. Madison, WI: University of Wisconsin Press.

Chi, E.M. and Reinsel, G.C. 1989. "Models for longitudinal data with random effects and AR(1) errors." *Journal of the American Statistical Association* 84: 452-59.

Curran, Patrick J. 2000. "A latent curve framework for studying developmental trajectories of adolescent substance use." Pp.1-42, in *Multivariate Applications in Substance Use Research*, edited by Jennifer Rose, L. Chassin, C. Presson, and J. Sherman. Hillsdale, NJ: Erlbaum.

Curran, Patrick J., and Bollen, Kenneth A. 2001. "The bests of both worlds: Combining autoregressive and latent curve models." Pp.105-136, in *New Methods for the Analysis of Change*, edited by Collins L.M. and Sayar, A.G. Washington, D.C.: American Psychological Association.

Curran, Patrick J., and Hussong, A.M. 2002. "Structural equation modeling of repeated measures data." Pp.59-86, in *Modeling Intraindividual Variability with Repeated Measures Data: Methods and Applications*, edited by D. Moskowitz and S. Hershberger. New York: Erlbaum Associates.

Diggle, P.J., Liang, K.Y., and Zeger, S.L. 1994. *Analysis of Longitudinal Data*. Clarendon Press: Oxford.

Duncan, O.D. 1969. "Some linear models for two-wave, two-variable panel analysis." *Psychological Bulletin 72:* 177-182.

Duncan, S.C., and Duncan, T.E. 1994. "Modeling in complete longitudinal substance use data using latent variable growth curve methodology." *Multivariate Behavioral Research* 29: 313-338.

Goldstein, H., Healy, M.J.R., and Rasbash, J. 1994. "Multilevel time series models with applications to repeated measures data." *Statistics in Medicine* 13: 1643-1655.

Hamaker, Ellen. 2003. "A note on the equivalence between the autoregressive latent trajectory model and the latent growth curve model with autocorrelated errors." Unpublished manuscript. Department of Psychology. University of Amsterdam.

Heise, David R. 1969. "Separating reliability and stability in test-retest correlation." *American Sociological Review 34:* 93-101.

Humphreys, L.G. 1960. "Investigations of the simplex." *Psychometrika 25:* 313-323.

Hussong, A.M., Hicks, R.E., Levy, S.A., and Curran, Patrick J. 2001. "Specifying relations between affect and heavy alcohol use among young adults." *Journal of Abnormal Psychology 110:* 449-461.

Jöreskog, Karl G. 1970. "A general method for analysis of covariance structures." *Biometrika 57:* 239-251.

Jöreskog, Karl G. 1973. "A general method for estimating a linear structural equation system." In *Structural Equation Models in the Social Sciences*, edited by Arthur S. Goldberger and Otis D. Duncan. New York:Academic Press.

Jöreskog, Karl G. 1977. "Structural equation models in the social sciences: specification, estimation, and testing." In *Applications of Statistics*, edited by P.R. Krishnaiah. Amsterdam: North-Holland.

Jöreskog, Karl G. 1978. "An econometric model for multivariate data. Research Report 78-1." Department of Statistics, University of Uppsala, Sweden.

Jöreskog, Karl G. 1979. "Statistical models and methods for analysis of longitudinal data." In *Advances in Factor Analysis and Structural Equation Models*, edited by Karl G. Jöreskog and Dag Sörbom. Cambridge, Mass: Abt.

Jöreskog, Karl G. and Sörbom, Dag 1996. *LISREL 8 User's Reference Guide*. Chicago: Scientific Software International.

Kenny, D.A. and Campbell, D.T. 1989. "On the measurement of stability in over-time data." *Journal of Personality 57:* 445-481.

Kenny, D.A. and Zautra, A. 2001. "Trait-state models for longitudinal data." Pp.243-263, in *New methods for the Analysis of Change*, edited by Linda Collins and Aline Sayer. Washington, DC:American Psychological Association.

Kessler, Ronald C. and David F. Greenberg. 1981. *Linear Panel Analysis*. NY:Academic Press.

Lawley, D.N., and Albert E. Maxwell 1971. *Factor Analysis as a Statistical Method*. London:Butterworth.

Little, Roderick J.A., and Rubin, Donald B. 1987. *Statistical Analysis with Missing Data*. New York: John Wiley & Sons.

MacCallum, R.C., Kim, C., Malarkey, W., and Kielcolt-Glaser, J 1997. "Studying multivariate change using multilevel models and latent curve models." *Multivariate Behavioral Research 32:* 215-253.

Marsh, H.W. 1993. "Stability of individual differences in multiwave panel studies: Comparison of simplex models and one-factor models." *Journal of Educational Measurement 30:* 157-183.

McArdle, John J. 1986. "Latent growth within behavior genetic models." *Behavioral Genetics 16:* 163-200.

McArdle, John J. 1991. "Structural models of developmental theory in psychology." Pp. 139-160, in *Annals of Theoretical Psychology, Volume VII.*, edited by P. Van Geert and L.P. Mos. New York: Plenum Press.

McArdle, John J. and Epstein, D. 1987. "Latent growth curves within developmental structural equation models." *Child Development 58:* 110-133.

McArdle, John J. and Hamagami, F. 2001. "Latent difference score structural models for linear dynamic analyses with incomplete longitudinal data." Pp.137-175, in *New Methods for the Analysis of Change*, edited by Linda Collins and Aline Sayer. Washington, DC:American Psychological Association.

Meredith, W., and Tisak, J. 1984. ""*Tuckerizing" curves.*" Paper presented at the annual meeting of the Psychometric Society, Santa Barbara, CA.

Meredith, W., and Tisak, J. 1990. "Latent curve analysis." *Psychometrika 55:* 107-122.

Muthén, Bengt 1991. "Analysis of longitudinal data using latent variable models with varying parameters." In *Best Methods for the Analysis of Change: Recent Advances, Unanswered Questions, Future Directions*, edited by Linda M. Collins and John L. Horn. APA: Washington, D.C.

Muthén, Bengt O., and Khoo, S.-T. 1998. "Longitudinal studies of achievement growth using latent variable modeling." *Learning and Individual Differences* 10: 73-101.

Raykov, T. 1997. "Growth curve analysis of ability means and variances in measures of fluid intelligence of older adults." *Structural Equation Modeling* 4: 283-319.

Rao, C.R. 1958. "Some statistical methods for comparison of growth curves." *Biometrika 51:* 83-90.

Reed, L. J. and Pearl, R. 1927. "On the summation of logistic curves." *Journal of the Royal Statistical Society 90:* 729-746.

Robertson, T. B. 1908. "On the normal rate of growth of an individual, and its biochemical significance." *Archiv für Entwicklungsmechanik der Organismen 25:* 581-614.

Rodebaugh, T.L., Curran, Patrick J., and Chambless, D.L. 2002. "Expectancy of panic in the maintenance of daily anxiety in panic disorder with agoraphobia: A longitudinal test of competing models." *Behavior Therapy* 33: 315-336.

Rogosa, D., and Willett, J.B. 1985. "Satisfying simplex structure is simpler than it should be." *Journal of Educational Statistics 10:* 99-107.

Rogosa, D.R., Brandt, D., and Zimowski, M. 1982. "A growth curve approach to the measurement of change." *Psychological Bulletin 92:* 726-748.

SAS 2000. SAS/STAT User's Guide: Version 8, Volume 1, 2, & 3. SAS Institute, Inc: Cary

Satorra, Albert 1990. "Robustness issues in structural equation modeling: A review of recent developments." *Quality & Quantity* 24: 367-386.

Satorra, Albert, and Peter M. Bentler. 1988. "Scaling corrections for chi-square statistics in covariance structure analysis." *Proceedings of the American Statistical Association* 308-313.

Scher, A.M., Young, A.C., and Meredith, W.M. 1960. "Factor analysis of the electrocardiogram." *Circulation Research 8:* 519-526.

Steiger, J.H. and Lind, J.M.. 1980. "Statistically based tests for the number of common factors." Paper presented at the annual meeting of the Psychometric Society, Iowa City, IA.

Stoolmiller, M. 1994. "Antisocial behavior, delinquent peer association, and unsupervised wandering for boys: Growth and change from childhood to early adolescence." *Multivariate Behavioral Research 29:* 263-288.

Tucker, L.R. 1958. "Determination of parameters of a functional relation by factor analysis." *Psychometrika 23:* 19-23.

Werts, Charles E., Jöreskog, Karl G., and Linn, Robert L. 1971. "Comment on the estimation of measurement error in panel data." *American Sociological Review 36:* 110-112.

Wiley, David E., and Wiley, James A. 1970. "The estimation of measurement error in panel data." *American Sociological Review 35:* 112-117.

Wishart, John 1938. "Growth rate determination in nutrition studies with bacon pig and their analysis." *Biometrika 30:* 16.

Kenneth A. Bollen is Director of the Odum Institute for Research in Social Science and the H.R. Immerwahr Distinguished Professor of Sociology at the University of North Carolina at Chapel Hill. He is the Year 2000 recipient of the Lazarsfeld Award for Methodological Contributions in Sociology. The ISI named him among the World's Most Cited Authors in the Social Sciences. Bollen's primary area of statistical research is structural equation modeling and latent curve models. He is the author of Structural Equation Models with Latent Variables *(Wiley) and of over 90 papers. Recent articles have been published in* Sociological Methods & Research, Sociological Social Methodology, Forces, Sociology of Education, Annual Review of Psychology, Population Studies, *and* Studies in Comparative International Development.

Patrick J. Curran is an associate professor in the L.L. Thurstone Quantitative Laboratory in the Department of Psychology at the University of North Carolina at Chapel Hill. His primary area of research focuses on the development of new quantitative methods for longitudinal data analysis and the application of these methods to study drug and alcohol use in children and adolescents. He has recently published papers in Psychological Methods, Multivariate Behavioral Research, Structural Equation Modeling, Journal of Abnormal Psychology, *and* Development and Psychopathology.